

WITH CAP

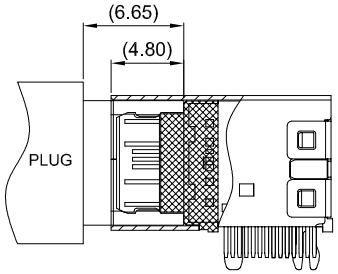

SECTION A-A
AFTER MATING

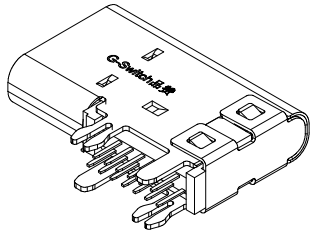

GT-USB-9036B-XX

Contact Plated
03=3μ"
30=30μ"

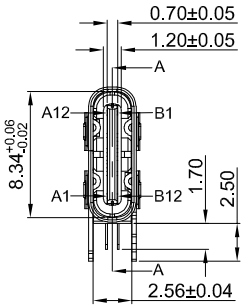

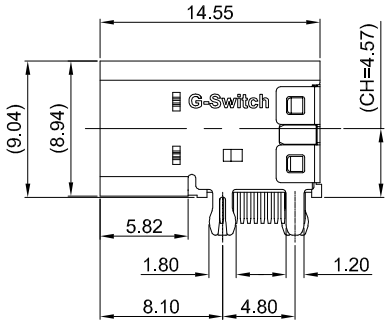

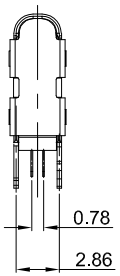

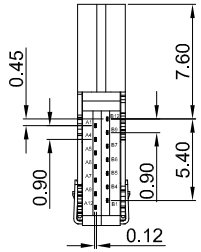

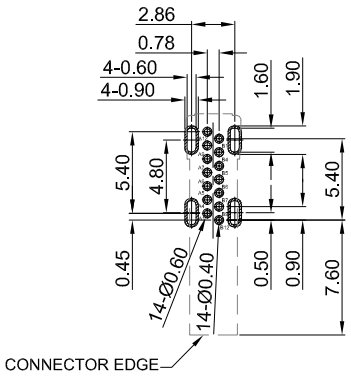

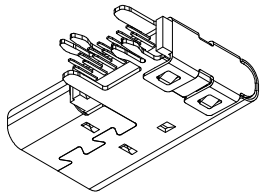

G-Switch USB-C Specification:

1.Current rated: 5A on vbus/1.25A
on vconn/0.25A on other
Voltage rating: 48V AC/DC
2.Withstanding voltage: 100V AC/minute
3.Contact resistance: 40mΩ Max
4.Insulation resistance: 100MΩ Min
5.Operating temperature: -40°C ~ +85°C
6.Mating force: 5N~20N
7.Unmating force: 8N~20N,after durability test: 6N~20N
8.Durability cycle:10,000 cycles

A1	A2	A3	A4	A5	A6	A7	A8	A9	A10	A11	A12
GND			VBUS	CC1	D+	D-		VBUS			GND
First			First	Second	Second	Second		First			First

B12	B11	B10	B9	B8	B7	B6	B5	B4	B3	B2	B1
GND			VBUS		D-	D+	CC2	VBUS			GND
First			First		Second	Second	Second	First			First

NO.	PARTS	MATERIAL	REMARKS
1	MIDDLE PLATE	STAINLESS STEEL 301	CLEAR ONLY
2	HOUSING	PA9T	BLACK UL 94V-0
3	TERMINALS	COPPER ALLOY C18150	Au PLATED ON CONTACT AREA G/F PLATED ON SOLDER AREA
4	FRONT SHELL	STAINLESS STEEL 304	Ni PLATED
5	COVER	STAINLESS STEEL 304	CLEAR ONLY
6	CAP	LCP	BLACK

PCB REFERENCE DIAGRAM
TOLERANCE:±0.05

Pb Process Capable
RoHS Compliant EU RoHS Standards
HALOGEN Compliant Halogen Free

SCALE: 1:1 UNIT: mm
SIZE: A4

Unless otherwise General Tolerance:
X. ±0.40
X.x ±0.30
X.xx ±0.20
X.xxx ±0.10
X° ±5°

Title: Flag Type Type-C 14P Female DIP CH=4.57 L=14.55mm

Molde Code: GT-USB-9036B

DRAWN	CHECKED	APPROVED	DATE
Wu	Xia	Chen	2025.09.21

品赞科技 G-Switch ®
www.dg-switch.com

REV: A0 SHEET: 1/1