REV.	ZONE	DESCRIPTION	DESIGN	DATE
B		NEW		

PIN数	A±0.15	B±0.15	C±0.15
2P	7.50	2.50	10.00
3P	10.00	5.00	12.50
4P	12.50	7.50	15.00
5P	15.00	10.00	17.50
6P	17.50	12.50	20.00

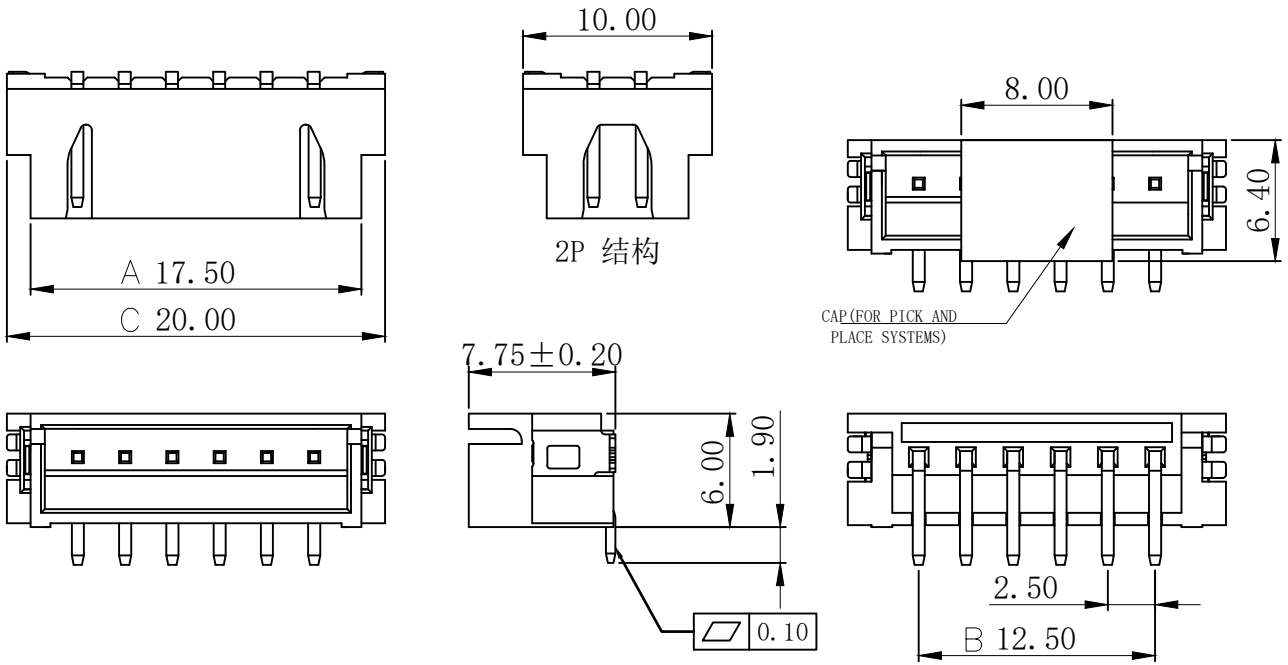

Specifications:
1.Rated Voltage : 250V AC/DC
2.Rated Current : 3A AC,DC
3.Withstand Voltage : 1000V AC/minute
4.Contact Resistance : 30mΩ(MAX.)
5.Insulation Resistance : 1000MΩ(MIN.)
6.Storage Temperature Range:-40°C~+85°C;
7.Operation Temperature Range:-25°C~+70°C;

Material:
1.Homing:High temperature plastic,LCP Natural
2.Contact: Copper alloy,Plating Ni&Sn
3.Solder tab: Copper alloy,Plating Ni&Sn

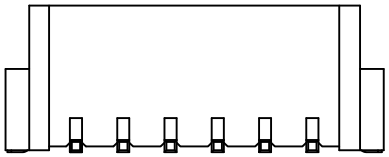

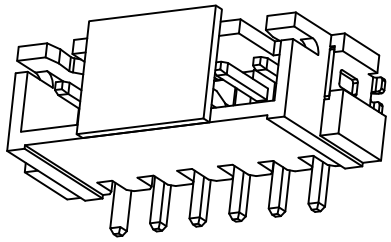

3D VIEW

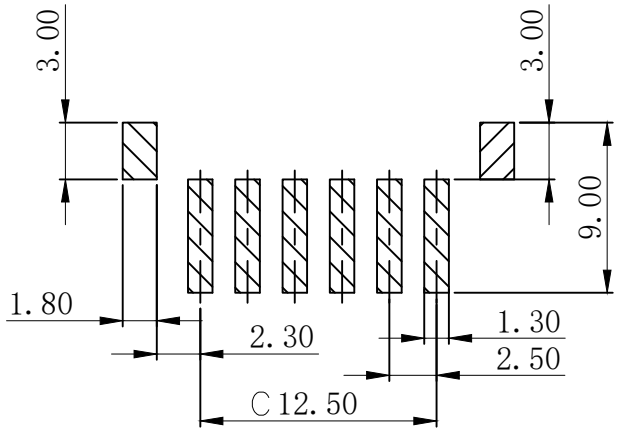

RECOMMENDER P.C.B.LAYOUT TOP VIEW
(COMPONENT SIDE TOLERANCE±0.1)

X. ±0.50	X.° ± 2°	UNITS mm	广东创粤科技有限公司
.X ±0.30	.X° ± 1°	MAT'L	TITLE: XH2.54立贴针座 加盖
.XX ±0.10	.XX° ± 0.5°		
.XXX ± 0.05		FINISH	APPD: / DWG NO.: CY-XH2.54-5P-SMT-46896
		Q'TY	CHKD:
			DR: / SCALE 1/1 / SHEET 1/1 / REV. A1

THESE DRAWINGS AND SPECIFICATIONS ARE THE PROPERTY OF SHENZHEN CHUANGYUE TECHNOLOGY CO.,LTD. AND SHALL NOT BE REPRODUCED, COPIED OR USED IN ANY MANNER WITHOUT THE PRIOR WRITTEN CONSENT OF SHENZHEN CHUANGYUE TECHNOLOGY CO., LTD