REV.	ZONE	DESCRIPTION	DESIGN	DATE
B		NEW		

RoHS Compliant

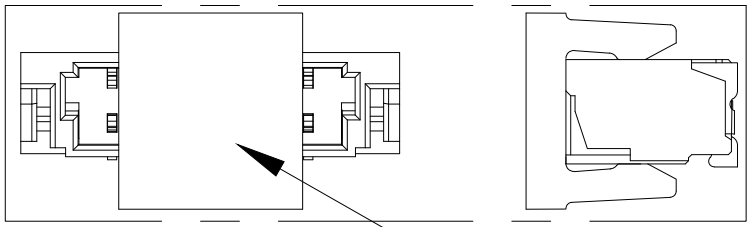

CAP(FOR PICK AND PLACE SYSTEMS)

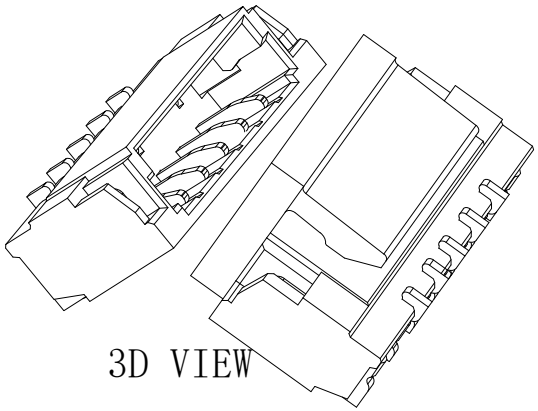

3D VIEW

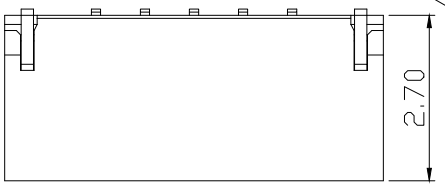

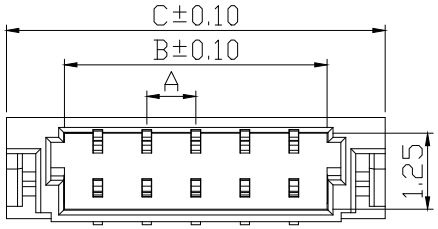

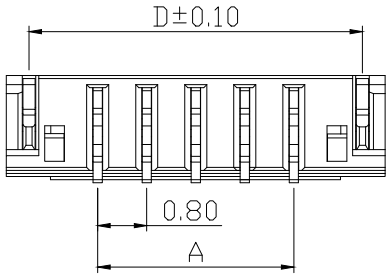

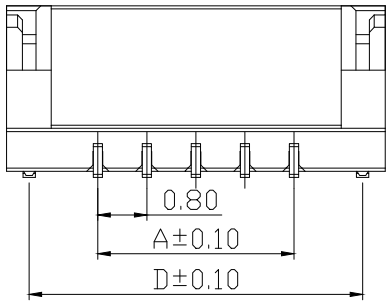

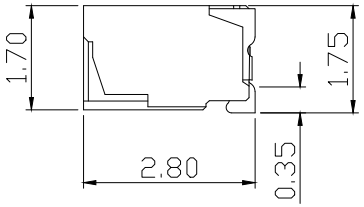

PIN数	A±0.1	B±0.1	C±0.1	D±0.1
2P	0.80	1.90	3.78	3.04
3P	1.60	2.70	4.58	3.84
4P	2.40	3.50	5.38	4.64
5P	3.20	4.30	6.18	5.44
6P	4.00	5.10	6.98	6.24
7P	4.80	5.90	7.78	7.04
8P	5.60	6.70	8.58	7.84
9P	6.40	7.50	9.38	8.64
10P	7.20	8.30	10.18	9.44
11P	8.00	9.10	10.98	10.24
12P	8.80	9.90	11.78	11.04
13P	9.60	10.70	12.58	11.84
14P	10.40	11.50	13.38	12.64
15P	11.20	12.30	14.18	13.44
16P	12.00	13.10	14.98	14.24
17P	12.80	13.90	15.78	15.04
18P	13.60	14.70	16.58	15.84
19P	14.40	15.50	17.38	16.64
20P	15.20	16.30	18.18	17.44

Specifications:

Rated Voltage : 30V AC/DC

Rated Current : 0.3A AC,DC

Withstand Voltage : 200V AC/minute

Contact Resistance : 30mΩ(MAX.)

Insulation Resistance : 100MΩ(MIN.)

Temperature Range : −25°C~+85°C

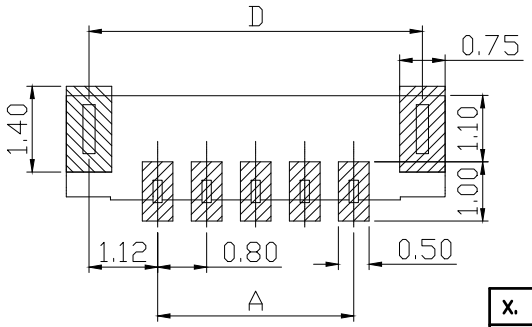

RECOMMENDER P.C.B.LAYOUT TOP VIEW
(COMPONENT SIDE TOLERANCE±0.1)

C	插片	黄铜	Gold−flash/NI&SN	
B	插针	磷铜	Gold−flash/NI&SN	
A	基座	LCP	本 色	
序号	品 名	材 质	电镀/颜色	备 注

X. ±0.50	X.° ± 2°	UNITS mm	广东创粤科技有限公司
.X ±0.30	.X° ± 1°	MAT'L	TITLE: 针座0.8立贴 镀锡
.XX ±0.10	.XX° ± 0.5°		
.XXX ± 0.05		FINISH	APPD: / DWG NO.: CY-0.8-5P-SMT-468121
		Q'TY	CHKD:
			DR:

THESE DRAWINGS AND SPECIFICATIONS ARE THE PROPERTY OF SHENZHEN CHUANGYUE TECHNOLOGY CO.,LTD. AND SHALL NOT BE REPRODUCED, COPIED OR USED IN ANY MANNER WITHOUT THE PRIOR WRITTEN CONSENT OF SHENZHEN CHUANGYUE TECHNOLOGY CO., LTD

SCALE	SHEET	REV.
1/1	1/1	A1