REV.	ZONE	DESCRIPTION	DESIGN	DATE
B		NEW		

RoHS Compliant

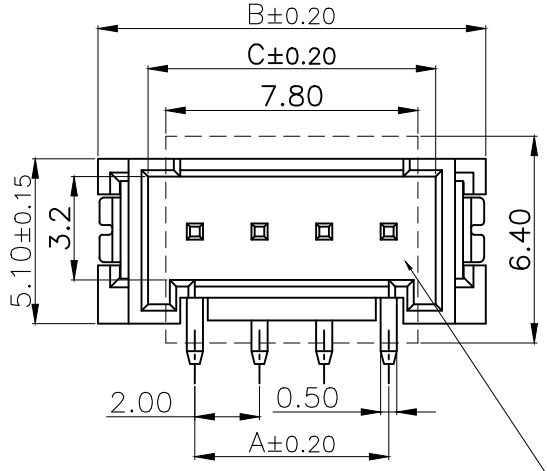

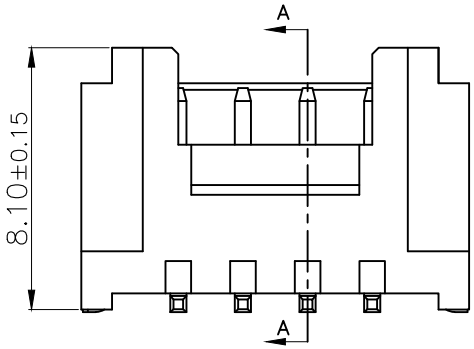

Specifications:

1. Rated Voltage : 250V AC/DC
2. Rated Current : 2A AC,DC
3. Withstand Voltage : 500V AC/minute
4. Contact Resistance : 30mΩ(MAX.)
5. Insulation Resistance : 1000MΩ(MIN.)
6. Storage Temperature Range:-40°C~+85°C;
7. Operation Temperature Range:-25°C~+85°C;

CAP(FOR PICK AND PLACE SYSTEMS)

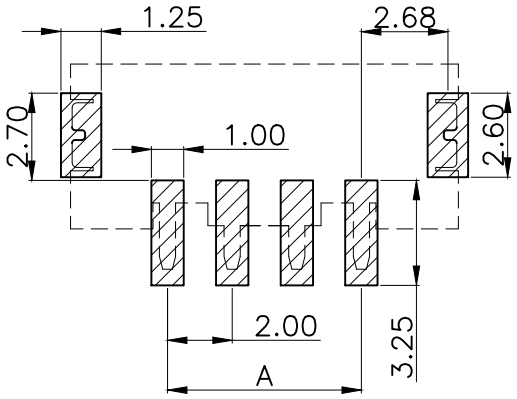

P.C.B LAYOUT

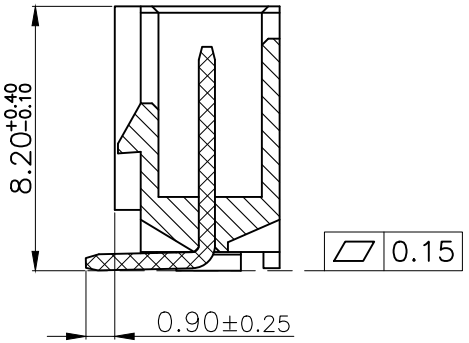

PIN数	尺寸（mm）			
	A	B	C	
2	2.0	8.0	4.9	
3	4.0	10.0	6.9	
4	6.0	12.0	8.9	
5	8.0	14.0	10.9	
6	10.0	16.0	12.9	
7	12.0	18.0	14.9	
8	14.0	20.0	16.9	
9	16.0	22.0	18.9	
10	18.0	24.0	20.9	
11	20.0	26.0	22.9	
12	22.0	28.0	24.9	
13	24.0	30.0	26.9	
14	26.0	32.0	28.9	
15	28.0	34.0	30.9	
16	30.0	36.0	32.9	

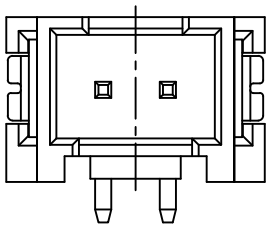

ZJ-2PLT

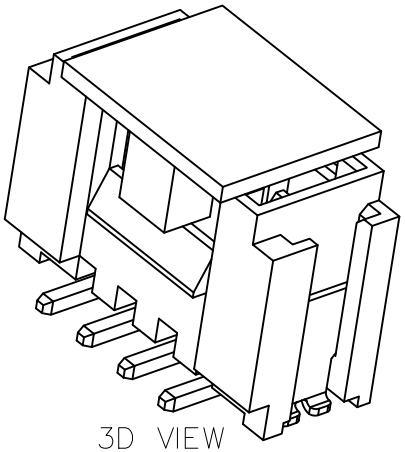

3D VIEW

序号	品 名	材 质	电镀／颜色	备 注
C	插片	黄铜	镀镍锡	
B	插针	黄铜	镀镍锡	
A	基座	LCP	本 色	

X. ±0.50	X.° ± 2°	UNITS mm	广东创粤科技有限公司
.X ±0.30	.X° ± 1°	MAT'L	TITLE: HY2.0 立贴针座
.XX ±0.10	.XX° ± 0.5°		
.XXX ± 0.05		FINISH	APPD: / DWG NO.: CY-HY2.0-3P-SMT-46887
		Q'TY	CHKD:
			DR:

THESE DRAWINGS AND SPECIFICATIONS ARE THE PROPERTY OF SHENZHEN CHUANGYUE TECHNOLOGY CO.,LTD. AND SHALL NOT BE REPRODUCED, COPIED OR USED IN ANY MANNER WITHOUT THE PRIOR WRITTEN CONSENT OF SHENZHEN CHUANGYUE TECHNOLOGY CO., LTD

SCALE	SHEET	REV.
1/1	1/1	A1