REV.	ZONE	DESCRIPTION	DESIGN	DATE
B		NEW		

3	插片	黄铜H65	镀镍锡	
2	插针	黄铜H65	镀镍锡	
1	基座	LCP	黑色	
序号	品 名	材 质	电镀／颜色	备 注

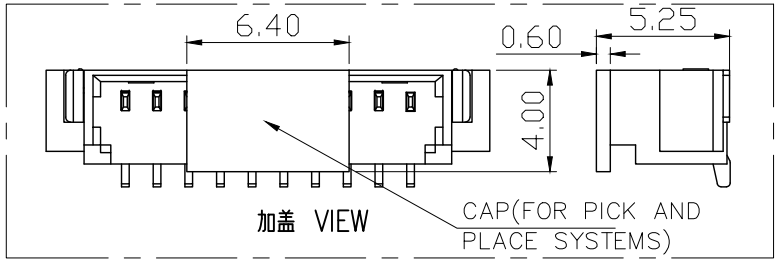

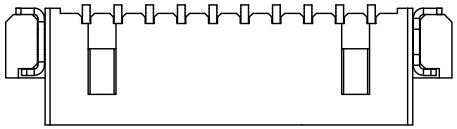

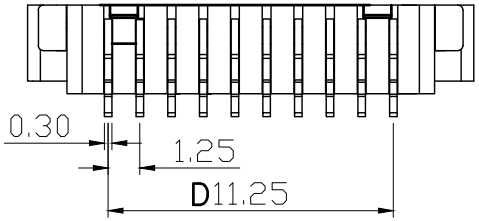

Specifications:

1. Rated Voltage : 125V AC/DC
2. Rated Current : 1A AC,DC
3. Withstand Voltage : 200V AC/minute
4. Contact Resistance : 30mΩ(MAX.)
5. Insulation Resistance : 100MΩ(MIN.)
6. Storage Temperature Range:-40°C~+85°C;
7. Operation Temperature Range:-40°C~+105°C;

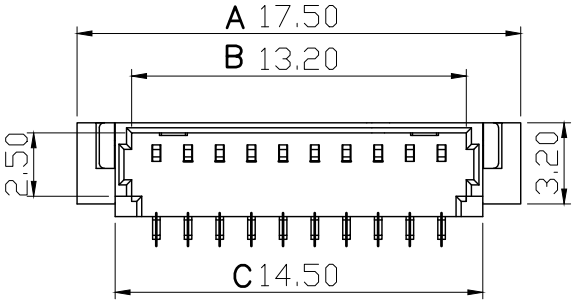

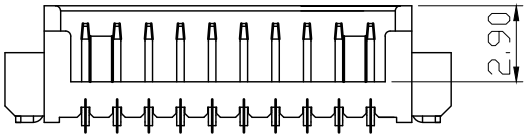

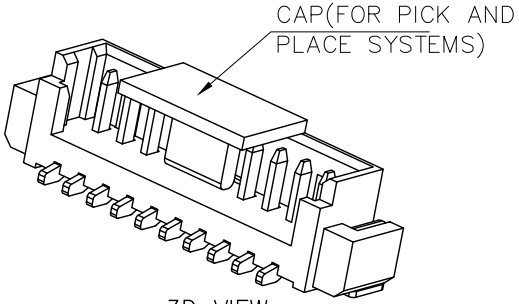

3D VIEW

PIN数	A±0.1	B±0.1	C±0.1	D±0.1
2P	7.50	3.20	4.50	1.25
3P	8.75	4.45	5.75	2.50
4P	10.00	5.70	7.00	3.75
5P	11.25	6.95	8.25	5.00
6P	12.50	8.20	9.50	6.25
7P	13.75	9.45	10.75	7.50
8P	15.00	10.70	12.00	8.75
9P	16.25	11.95	13.25	10.00
10P	17.50	13.20	14.50	11.25

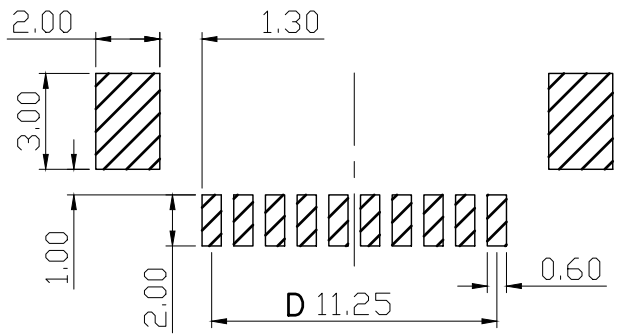

RECOMMENDER P.C.B.LAYOUT TOP VIEW
(COMPONENT SIDE TOLERANCE±0.1)

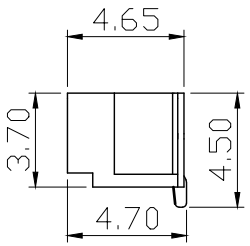

X. ±0.50	X.° ± 2°	UNITS mm	广东创粤科技有限公司
.X ±0.30	.X° ± 1°	MAT'L	TITLE: 针座1.25立贴加盖
.XX ±0.10	.XX° ± 0.5°		
.XXX ± 0.05		FINISH	APPD: / DWG NO.: CY-P1.25-3P-SMT-46844
		Q'TY	CHKD:
			DR:

THESE DRAWINGS AND SPECIFICATIONS ARE THE PROPERTY OF SHENZHEN CHUANGYUE TECHNOLOGY CO.,LTD. AND SHALL NOT BE REPRODUCED, COPIED OR USED IN ANY MANNER WITHOUT THE PRIOR WRITTEN CONSENT OF SHENZHEN CHUANGYUE TECHNOLOGY CO., LTD

SCALE	SHEET	REV.
1/1	1/1	A1