| REV. | ZONE | DESCRIPTION | DESIGN | DATE |
|---|---|---|---|---|
| B | | NEW | | |

RoHS Compliant

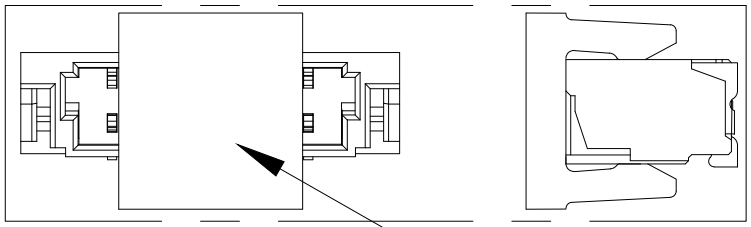

CAP(FOR PICK AND PLACE SYSTEMS)

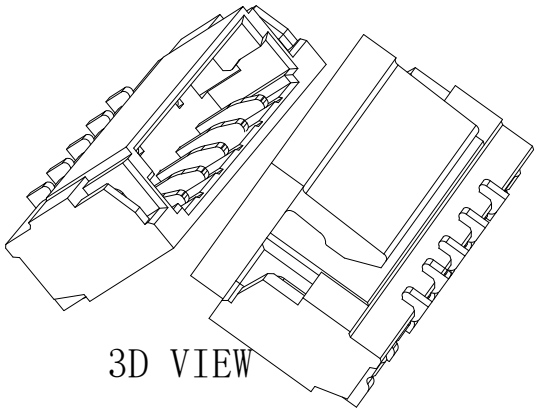

3D VIEW

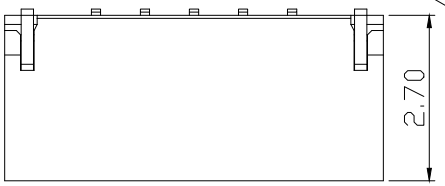


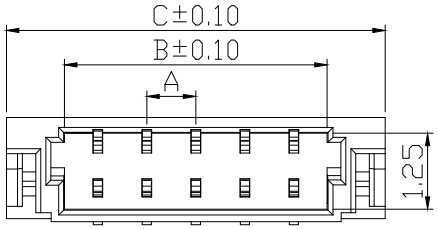


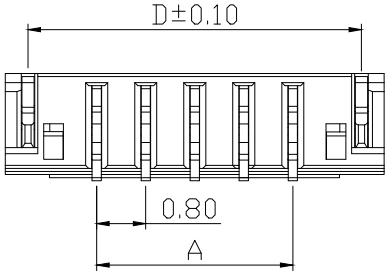


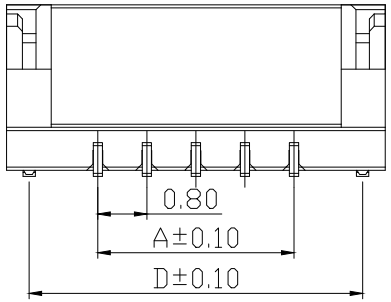


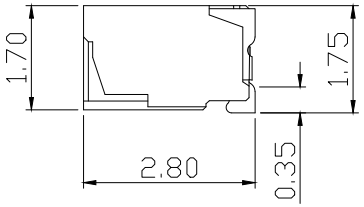


| PIN数 | A±0.1 | B±0.1 | C±0.1 | D±0.1 |
|---|---|---|---|---|
| 2P | 0.80 | 1.90 | 3.78 | 3.04 |
| 3P | 1.60 | 2.70 | 4.58 | 3.84 |
| 4P | 2.40 | 3.50 | 5.38 | 4.64 |
| 5P | 3.20 | 4.30 | 6.18 | 5.44 |
| 6P | 4.00 | 5.10 | 6.98 | 6.24 |
| 7P | 4.80 | 5.90 | 7.78 | 7.04 |
| 8P | 5.60 | 6.70 | 8.58 | 7.84 |
| 9P | 6.40 | 7.50 | 9.38 | 8.64 |
| 10P | 7.20 | 8.30 | 10.18 | 9.44 |
| 11P | 8.00 | 9.10 | 10.98 | 10.24 |
| 12P | 8.80 | 9.90 | 11.78 | 11.04 |
| 13P | 9.60 | 10.70 | 12.58 | 11.84 |
| 14P | 10.40 | 11.50 | 13.38 | 12.64 |
| 15P | 11.20 | 12.30 | 14.18 | 13.44 |
| 16P | 12.00 | 13.10 | 14.98 | 14.24 |
| 17P | 12.80 | 13.90 | 15.78 | 15.04 |
| 18P | 13.60 | 14.70 | 16.58 | 15.84 |
| 19P | 14.40 | 15.50 | 17.38 | 16.64 |
| 20P | 15.20 | 16.30 | 18.18 | 17.44 |

Specifications:

Rated Voltage : 30V AC/DC

Rated Current : 0.3A AC,DC

Withstand Voltage : 200V AC/minute

Contact Resistance : 30mΩ(MAX.)

Insulation Resistance : 100MΩ(MIN.)

Temperature Range : −25°C~+85°C

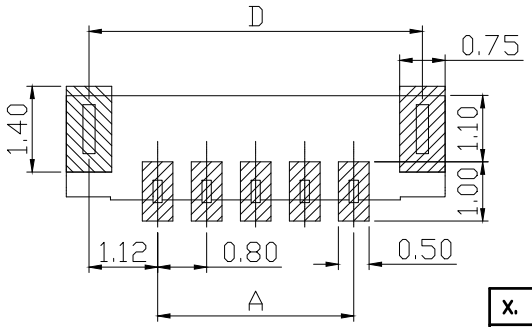


RECOMMENDER P.C.B.LAYOUT TOP VIEW
(COMPONENT SIDE TOLERANCE±0.1)

| | | | | |
|---|---|---|---|---|
| C | 插片 | 黄铜 | Gold−flash/NI&SN | |
| B | 插针 | 磷铜 | Gold−flash/NI&SN | |
| A | 基座 | LCP | 本 色 | |
| 序号 | 品 名 | 材 质 | 电镀/颜色 | 备 注 |

| | | | |
|---|---|---|---|
| X. ±0.50 | X.° ± 2° | UNITS mm | 广东创粤科技有限公司 |
| .X ±0.30 | .X° ± 1° | MAT'L | TITLE: 针座0.8立贴 镀金 |
| .XX ±0.10 | .XX° ± 0.5° | | |
| .XXX ± 0.05 | | FINISH | APPD: |
| | | Q'TY | CHKD: |
| | | | DR: |

THESE DRAWINGS AND SPECIFICATIONS ARE THE PROPERTY OF SHENZHEN CHUANGYUE TECHNOLOGY CO.,LTD. AND SHALL NOT BE REPRODUCED, COPIED OR USED IN ANY MANNER WITHOUT THE PRIOR WRITTEN CONSENT OF SHENZHEN CHUANGYUE TECHNOLOGY CO., LTD

DWG NO.: CY-0.8-3P-SMT-468109

| SCALE | SHEET | REV. |
|---|---|---|
| 1/1 | 1/1 | A1 |