REV.	ZONE	DESCRIPTION	DESIGN	DATE
B		NEW		

RoHS Compliant

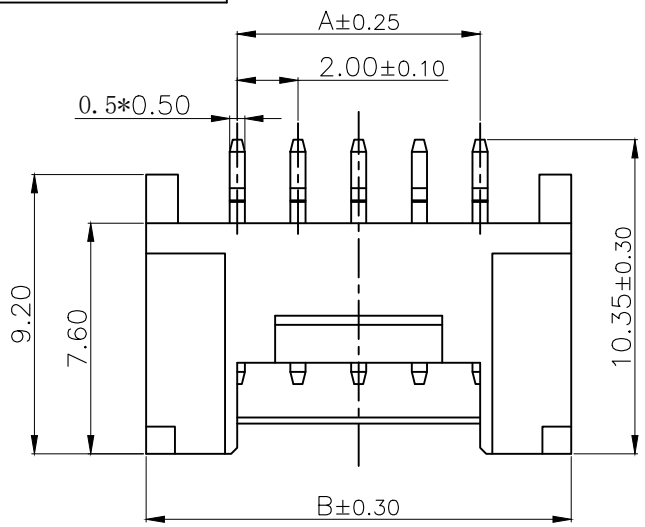

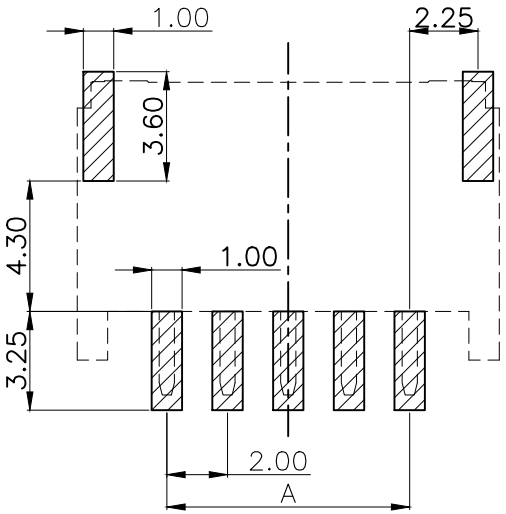

P.C.B LAYOUT

Specifications:

1. Rated Voltage : 250V AC/DC
2. Rated Current : 2A AC,DC
3. Withstand Voltage : 500V AC/minute
4. Contact Resistance : 30mΩ(MAX.)
5. Insulation Resistance : 1000MΩ(MIN.)
6. Storage Temperature Range:-40°C~+85°C;
7. Operation Temperature Range:-25°C~+85°C;

PIN数	尺寸（mm）			
	A	B	C	D
2	2.0	8.0	4.9	2.8
3	4.0	10.0	6.9	3.0
4	6.0	12.0	8.9	3.5
5	8.0	14.0	10.9	5.5
6	10.0	16.0	12.9	7.5
7	12.0	18.0	14.9	9.5
8	14.0	20.0	16.9	11.5
9	16.0	22.0	18.9	13.5
10	18.0	24.0	20.9	15.5
11	20.0	26.0	22.9	17.5
12	22.0	28.0	24.9	19.5
13	24.0	30.0	26.9	21.5
14	26.0	32.0	28.9	23.5
15	28.0	34.0	30.9	25.5
16	30.0	36.0	32.9	27.5

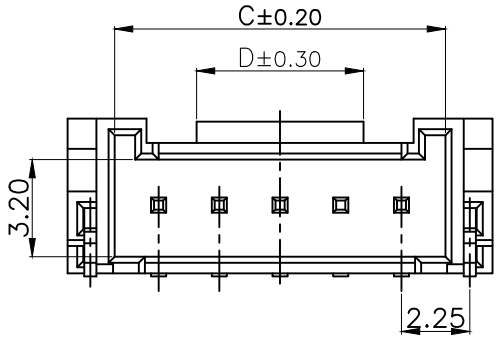

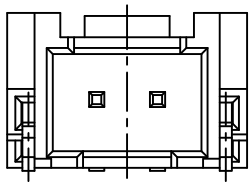

ZJ-2PWT

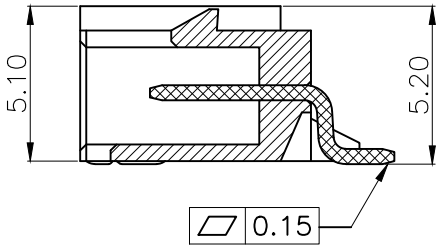

序号	品 名	材 质	电镀／颜色	备 注
C	插片	黄铜	镀镍锡	
B	插针	黄铜	镀镍锡	
A	基座	LCP	本 色	

X. ±0.50	X.° ± 2°	UNITS mm	广东创粤科技有限公司
.X ±0.30	.X° ± 1°		
.XX ±0.10	.XX° ± 0.5°	MAT'L	TITLE: HY2.0 卧贴针座
.XXX ±0.05			
THESE DRAWINGS AND SPECIFICATIONS ARE THE PROPERTY OF SHENZHEN CHUANGYUE TECHNOLOGY CO.,LTD. AND SHALL NOT BE REPRODUCED, COPIED OR USED IN ANY MANNER WITHOUT THE PRIOR WRITTEN CONSENT OF SHENZHEN CHUANGYUE TECHNOLOGY CO., LTD		FINISH	APPD:
		Q'TY	CHKD:
			DR:

DWG NO.: CY-HY2.0-8P-SMT-46885

SCALE	SHEET	REV.
1/1	1/1	A1