承认 No.	JHNE-CG-L-C619

Specification Approval Sheet

承认书

Dear customers,尊敬的客户：

Please confirm the specification approval of Jianghai Supercapacitor. 请确认江海超级电容规格承认书

Customer Approval 客户承认	Signature(签字)：	Date(日期)：
		2022.06.08
	Company Name(公司名称)：	
	Company Stamp(公司盖章)：	

南 通 江 海 电 容 器 股 份 有 限 公 司

NANTONG JIANGHAI CAPACITOR CO., LTD

南 通 江 海 储 能 技 术 有 限 公 司

NANTONG JIANGHAI NEW ENERGY CO., LTD

地址：中国. 江苏省南通市通州区高新技术产业开发区希望大道 998 号

ADD: No.998 Hope Avenue, High Tech Industrial Development Zone, Nantong City, Jiangsu Province, China

TEL: +86 – 0513 – 86726066 FAX: +86 – 0513 – 86726064 P.C. 226361

E-MAIL: xujianhong@jianghai.com

Specification of Jianghai Supercapacitor

江海超级电容规格书

Part Number: SCCHBE3R8556MRH080025E

Product Spec.: HBE3.8V55F

Prepared 拟制	Checked 审核	Approved 批准
陈杰		

AMENDMENT RECORDS

修改履历

Ver. No. 版本	Description 内容	Date 日期	Checked 审核
A00	Initial Release	08/06/2022	许检红

1. General Characteristics/一般特性

No.	Items/项目	Criteria/参数值	Remark/备注
01	Rated Max. Operating Voltage 额定最高工作电压	3.8 V	
02	Rated Min. Operating Voltage 额定最低工作电压	2.5 V	
03	Min. Allowable Operating Voltage 最低允许工作电压	2.2V	
04	Rated Capacitance 额定容量	55F	25℃
05	Capacitance Tolerance 容差范围	±20%	
06	Surge Voltage 浪涌电压	4.2 V	
07	ESR_{AC} 交流内阻	200mΩ	1KHz，25℃
08	ESR_{DC} 直流内阻	450mΩ	25℃
09	Rated Charge/discharge Current 额定充放电电流	0.275A	
10	Max. Charge/discharge Current(≤3sec) 最大充放电电流	1.8A	
11	Self-discharge current 自放电电流	≤3.5μA	3 months
12	Leakage Current 漏电流	≤5.0μA	72h
13	Operating Temperature Range 工作温度范围	-25~+70℃/85℃(3.5V)	
14	Storage temperature Range 存储温度范围	-30~+70℃	
15	Cycle Life 循环寿命	≥250,000 cycles	
16	Weight 重量	2.2±0.3 g	

2.Environmental Characteristics/环境特性

No.	Items/项目	Specification/Condition/规格/条件
01	Temperature Characteristics 温度特性	｜△C/C｜≤10%，ESR_{AC} ≤ specified ESR_{AC}， at +70℃ +70℃，容量变化：初始值的 10%以内，ESR_{AC}：不超过规定值 ｜△C/C｜≤50%，ESR_{AC}≤ 10 times of specified ESR_{AC}， at -25℃ -25℃，容量变化：初始值的 50%以内，ESR_{AC}：不超过 10 倍规定值
02	High temperature loaded 高温负荷	｜△C/C｜≤30%, ESR_{AC}≤ 2 times of specified ESR_{AC}， at +70℃/ 1000hrs/Rated voltage +70℃，额定电压下，负荷 1000h，容量变化：初始值的 30%以内，ESR_{AC}：不超过 2 倍规定值
03	High temperature storage 高温存储	｜△C/C｜≤30%，ESR_{AC}≤ 2 times of specified ESR_{AC} ，at +70℃/1000hrs +70℃，高温存储 1000h，容量变化：初始值的 30%以内，ESR_{AC}：不超过 2 倍规定值
04	Humidity Resistance 稳态湿热	+40℃, 90--95%RH，240h，｜△C/C｜≤30%, ESR_{AC}≤2 times of specified ESR_{AC} +40℃, 90--95%RH，高温高湿存储 240h，容量变化：初始值的 30%以内，ESR_{AC}：不超过 2 倍规定值

3.Jianghai P/N：江海代码

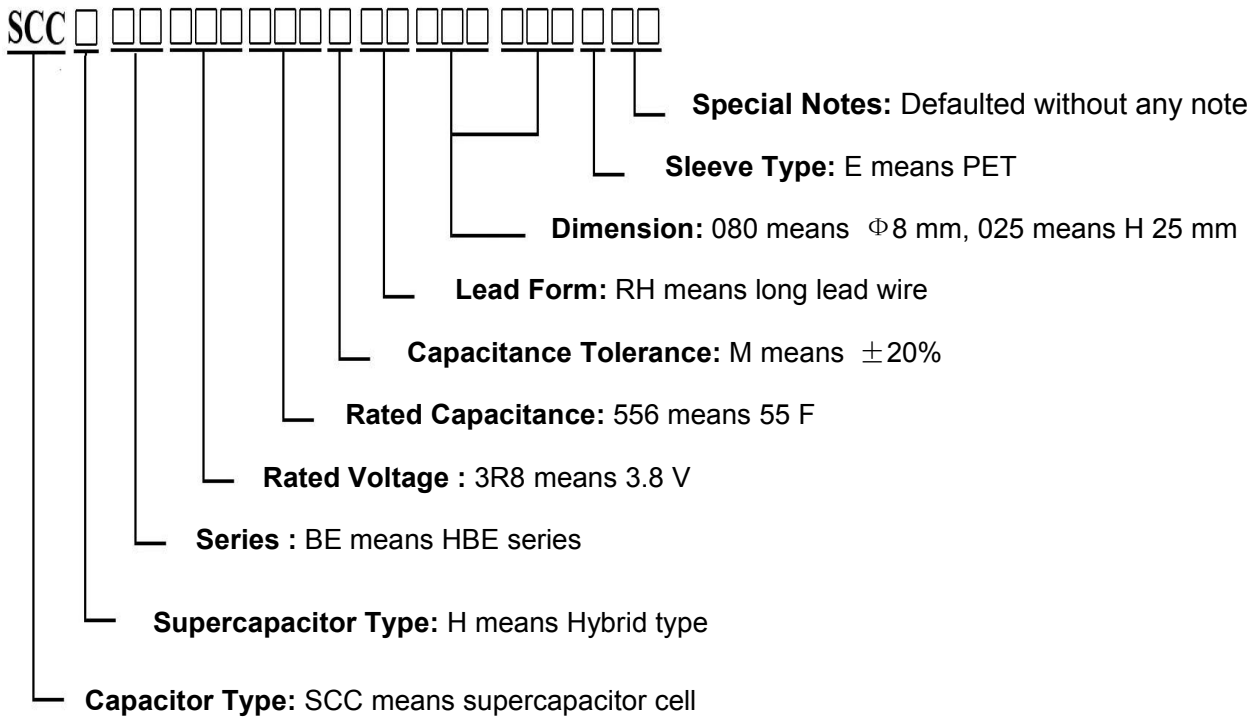

4. Product Dimensions: 产品尺寸

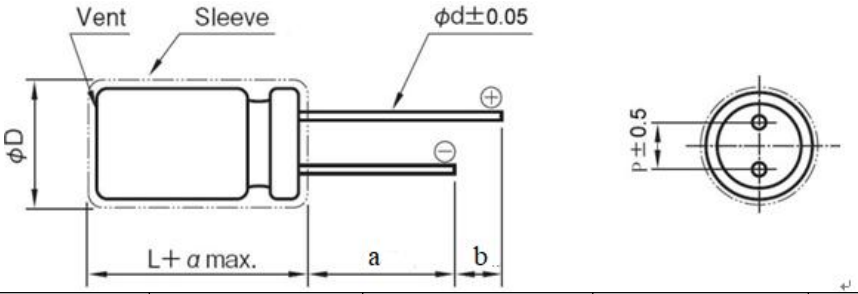

Model（产品规格）	Items（项目）	Criteria（标准）	Items（项目）	Criteria（标准）
HBE3.8V55F	ΦD	8.0±0.5 mm	L	25.0±2.0 mm
	p	3.5±0.5 mm	Φd	0.6±0.05 mm
	a	22.0±3.0 mm	b	5.0±2.0 mm

5. Test Methods:测试方法

Note（备注）:

U_R=3.8V（Rated Max. Operating Voltage/额定最高工作电压）

U_{min}=2.5V（Rated Min. Operating Voltage/额定最低工作电压）

C_R——rated capacitance（额定容量）

Charge/discharge current（充放电电流）：$I=5*C_R*(U_R-U_{min})/3600$

5.1. Static capacitance（静电容量）

At room temperature(25±2℃), testing the static capacitance of capacitor just following the steps below:

室温(25±2℃)下，按照如下步骤测试电容器的静电容量：

(a)the capacitor is charged to U_R with constant current I;

电容器以恒定电流 I 充电到 U_R；

(b)the capacitor is continued to charge for 30 minutes at U_R;

电容器以 U_R 恒压充电 30min；

(c) the capacitor is discharged to U_{min} with a constant current I, record the start discharge voltage U_s;

电容器以恒定电流 I 放电到 U_{min}，记录开始放电的电压 U_s；

(d) repeat the steps for three times from (a) to (c) and record the discharge time t of the capacitor, when the voltage drops from U_s to U_{min} ;

重复步骤(a)- (c)）3 次，记录电容器从 U_s 至 U_{min} 的放电时间 t；

(e) calculate the static capacitance of capacitor within the third cycle according to the formula (1) ,as the static capacitance of the capacitor.

按公式（1）计算第 3 次循环的静电容量，作为电容器的静电容量。

$$C=It/(U_s-U_{min}) \quad (1)$$

5.2. DC internal resistance(ESR_{DC})（直流内阻）

At room temperature(25±2℃), testing the DC internal resistance of capacitor just following the steps below:

室温(25±2℃)下，按照如下步骤测试电容器的直流内阻：

(a)the capacitor is charged to U_R with constant current I;

电容器以恒定电流 I 充电到 U_R；

(b)the capacitor is continued to charge for 30 minutes at U_R, record the terminal time t_0;

电容器以 U_R 恒压充电 30min，记录结束时刻为 t_0；

(c) the capacitor is discharged to U_{min} with a constant current I ,record the voltage U_i at t_0+30 ms;

电容器以恒定电流 I 放电到 U_{min}，记录 t_0+30ms 时的电压 U_i；

(d) repeat the steps for three times from (a) to (c);

重复步骤(a)- (c) 3 次；

(e) calculate the DC internal resistance of capacitor (ESR_{DC}) within the third cycle according to the formula (2), as the DC internal resistance of the capacitor.

按公式（2）计算第 3 次循环的直流内阻，作为电容器的直流内阻。

$$ESR_{DC}=(U_R-U_i)/I \quad (2)$$

5.3.AC internal resistance(ESR_{AC})（交流内阻）

At room temperature (25±2℃) , the capacitor is discharged to U_{min} with constant current I before testing.

室温(25±2℃)下，在测试前，必须将电容器用恒定电流 I 放电至 U_{min}。

Fig1 shows the circuit diagram of AC internal resistance test. Specifically, the alternating current with fixed frequency 1kHz is applied to the capacitor and the equivalent current I_{AC} is 5mA~100mA. When the frequency of the alternating current is high, it can be considered that the ideal capacitor C_0 is in a short-circuit state, and a voltage drop V_{AC} is generated on the internal resistance of the capacitor. The value of V_{AC} can be read by the AC voltmeter. The AC internal resistance of capacitor (ESR_{AC}) can be calculated by formula (3).

图 1 为交流内阻测试线路图。在电容器两端加上固定频率 1kHz 的交流电流，等效电流 I_{AC} 为 5mA~100mA，当交流电的频率较高时，可以认为理想电容器 C_0 为短路状态，同时在电容器的内阻上产生一个压降 V_{AC}，V_{AC} 的值由交流电压表读得，电容器的交流内阻值 ESR_{AC} 可由公式（3）计算得到。

$$ESR_{AC}=V_{AC}/I_{AC} \quad (3)$$

In this formula（式中）:

ESR_{AC}---- AC internal resistance, unit (Ω);

ESR_{AC}——交流内阻，单位为欧姆（Ω）；

V_{AC}--- Equivalent AC voltage, unit (V);

V_{AC}——等效交流电压，单位为伏特（V）；

I_{AC}--- Equivalent AC current, unit (A).

I_{AC}——等效交流电流，单位为安培（A）。

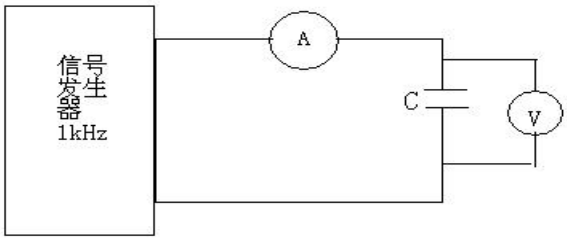

Directions（说明）:

C--- measured capacitor（被测电容器）;

V--- AC voltmeter（交流电压表）;

A--- AC ammeter（交流电流表）.

Fig 1 the circuit diagram of AC internal resistance test（交流内阻测试线路图）

5.4.Self-discharge current（自放电电流）

At room temperature (25±2℃) , testing the self-discharge current of capacitor according to the following steps:

室温(25±2℃)下，按照如下步骤测试电容器的自放电电流：

(a) According to 5.1, test the static capacitance *C* of capacitor;

按照 5.1 测试电容器的静电容量 *C*;

(b) the capacitor is charged to U_R with constant current *I*;

电容器以恒定电流 *I* 充电到 U_R;

(c) the capacitor is continued to charge for 30 minutes at U_R;

电容器以 U_R 恒压充电 30min;

(d) test the terminal voltage U_1 of capacitor after 3 months at open circuit under room temperature;

在室温条件下开路静置 3 个月后，测量电容器的端电压 U_1;

(e) the self-discharge current can be calculated by formula (4),as the test value.

按公式（4）计算自放电电流，作为测试值。

$$I_{SD} = C\,(U_R - U_1)/t*10^6 \qquad (4)$$

In this formula（式中）:

I_{SD} --- self-discharge current, unit (μA);

I_{SD}——自放电电流，单位为微安（μA）；

C --- the static capacitance, unit (F);

C——静电容量，单位为法拉（F）；

t --- the rest time of open circuit, unit (s).

t——开路静置时间，单位为秒（s）。

5.5. Leakage current（漏电流）

At room temperature (25±2℃) , testing the leakage current of capacitor according to the following steps:

室温(25±2℃)下，按照如下步骤测试电容器的漏电流：

(a)the capacitor is charged to U_R with constant current I;

电容器以恒定电流 I 充电到 U_R；

(b)the capacitor is continued to charge for 72h at U_R, record the terminal current as leakage current;

电容器以 U_R 恒压充电 72h，记录充电结束后电流为产品漏电流。

6.Handling Precautions and Guidelines 注意事项和使用指导

For safety application, please contact JIANGHAI directly for any technical specifications, handling precautions and guidelines critical to application.

为安全起见，当设计的设备需要使用电容器时，请与江海直接联系咨询技术规格、安装注意事项和使用要求。

6.1 Precautions（注意事项）

(1) Prohibition of disassembly 禁止拆卸

The disassembling may generate internal short circuit in the cell, which may cause gassing, leakage, explosion, or other problems.

拆卸电容会导致内部短路，可能导致产气，泄漏，爆炸，或其他问题。

Electrolyte is harmful: In case the electrolyte comes into contact with the skin, or eyes, physicians shall flush the electrolyte immediately with fresh water and medical advice is to be sought.

电解液是有害的：如果电解液接触到皮肤或眼睛，应立即用清水冲洗并寻求医生的治疗。

(2) Prohibition of dumping of cells into fire 禁止将电容投入火中

These may cause explosion of the cells, which is very dangerous and is prohibited.

这可能会导致电容爆炸，这是非常危险的，是被禁止的。

(3) Prohibition of cells immersion into liquid 禁止将电容浸入液体

The cells shall never be soaked with liquids such as water, seawater, drinks such as juices,

coffee or others.

电容决不能用水、海水、果汁、咖啡或其他饮料等液体浸泡。

(4) Prohibition of use of damaged cells 禁止使用损坏的电容

The cells might be damaged during shipping by shock. If any abnormal features of the cells are found such as damages in the cell package, smelling of an electrolyte, an electrolyte leakage and others, the cells shall never be used any more.

在运送过程中，电容可能因受到冲击而损坏。如果发现电容有任何异常情况，如包装破损、电解液气味、电解液泄漏等，请勿使用该电容。

The Cells with a smell of the electrolyte or a leakage shall be placed away from fire to avoid firing or explosion.

有电解液味道或泄漏的电容应放置在远离火的地方，以避免起火或爆炸。

(5)Prohibition of short-circuit or using for outside the working voltage

禁止短路或使用超过电容器的允许的工作电压。

which may cause to gas, leakage, explosion or other problems.

可能导致产气，泄漏，爆炸，或其他问题。

(6)Prohibition of reversing the positive(+) and negative(-) terminals.

禁止反向充电。

Which may cause to gas, leakage, explosion or other problems

可能导致产气，泄漏，爆炸，或其他问题。

6.2 Handling Guidelines（使用指导）

(1) It is not suitable that cell is used under such conditions: AC circuit and wave filtering.

不可以用于以下场合：交流电路和滤波电路

(2) Work voltage of cell should not exceed rated max operating voltage and min allowable operating voltage of cell during using. Otherwise, will shorten shelf life, even cause swelling, leakage or crack.

电容的工作电压不应超过电容额定最高工作电压和最低允许工作电压。否则，会导致缩短使用寿命，甚至引起气胀、泄漏或开裂。

(3) Please check the polarity before using.If working under reverse polarity, cell will not only shorten shelf life, but also heavy damage, such as swelling, electrolyte leakage etc.

使用前请检查极性。如果在反极性下工作，电容不仅会缩短使用寿命，甚至还会造成严重的损坏，如气胀、电解液泄漏等。

(4) Environment 环境

Work temperature will have an influence on service life of cell. As usual, higher work temperature will shorten service life. So, it is better that cell works under as possible as low environmental temperature.

工作温度会影响电容的使用寿命。通常，较高的工作温度会缩短使用寿命。因此，最好是在低环境温度下工作。

Work temperature of cell should consider internal work temperature in the unit and temperature rise when cell works.

电容的工作温度应考虑机组内部工作温度和电容工作时的内部温升。

(5) IR drop IR 下降

When main power sources shut down, cell will change into work mode from failure mode, at the same time, OCV will decrease due to IR drop. So please choose proper product type according to internal resistance and operating current in product datasheet.

当主电源关闭，电容会从电源失效检测模式转变为后备电源工作模式，此时由于瞬间启动电流和电容内阻会导致开路电压下降。因此，请根据产品规格书中指定的内阻和工作电流选择合适的产品类型。

(6) Cells in series connection 串联连接的电容

When cells in series connection for higher work voltage, it should be assured that work voltage of any single cell must not exceed Max. work voltage of single cell, otherwise, will shorten shelf life, even cause swelling, leakage or crack.

当多个单体电容串联使用以提高工作电压时，应保证每个电容的工作电压不得超过电容的最大工作电压，否则会缩短寿命，甚至引起气胀、泄漏或开裂。

(7) Soldering 焊接

Heat shock will decrease electric performance of cell, even cause swelling, leakage or crack.

热冲击会降低电容的电性能，甚至引起气胀、泄漏或开裂。

Manual soldering is recommended, soldering temperature should not exceed 350℃, soldering time should not exceed 5s.

推荐使用手工焊接，焊接温度不应超过 350 度，焊接时间不应超过 5s。

Please don’t use wave soldering, reflow soldering of infrared heating and air heating.

请不要使用波峰焊、红外线加热和空气加热的回流焊。

7.Packaging 包装方法

Model（规格）	Cell quantity 单体数量(Pcs)		Dimensions 外形	Weight 重量
	Inner Box 内盒(Pcs)	Outer Case 外箱(Pcs)	尺寸（mm）	（Kg）
HBE3.8V55F	100	1200	335*335*245	5.3