Data Sheet

Customer：	
Product :	Thin Film Chip Resistor - ARG Series
Size:	0402/0603/0805/1206
Issued Date:	10-Nov-17
Edition :	REV. A4

RoHS Compliant

VIKING TECH CORPORATION
光頡科技股份有限公司

No.70, Guangfu N. Rad.,
Hsin Chu Industrial Park,
Hukou Hsiang, Hsin Chu Hsien,
303, Taiwan
TEL:886-3-5972931
FAX:886-3-5972935•886-3-5973494
E-mail:sales@viking.com.tw

VIKING TECH CORPORATION KAOHSIUNG BRANCH
光頡科技股份有限公司高雄分公司

No.248-3, Sin-Sheng Rd., Cian-Jhen Dist., Kaohsiung,
806, Taiwan

TEL:886-7-8217999
FAX:886-7-8228229
E-mail:sales@viking.com.tw

WUXI TMTEC CO., LTD.
無錫泰銘電子有限公司

No.1A,(Xixia Road),Machinery & Industry Park,
National Hi-Tech Industrial Development Zone of
Wuxi, Wuxi, Jiangsu Province, China
Zip Code:214028
TEL:86-510-85203339
FAX:86-510-85203667•86-510-85203977
E-mail:wuxisales@tmtec.com.tw

Produced by (QC)	Checked (QC)	Approved by (QC)	Prepared by (Sales)	Accepted by (Customer)
10-Nov-17	10-Nov-17	10-Nov-17		
Chun	***Ben Chang***	***Ben Chang***		

Thin Film Chip Resistor
(ARG Series)

■Features

－Advanced thin film technology
－SMD Type designed for automatic insertion
－Wide resistance range 1ohm ~ 2.49Mega ohm

■Applications

－Medical Equipment
－Testing / Measurement Equipment
－Printer Equipment
－Automatic Equipment Controller
－Converters
－Communication Device, Cell Phone, GPS, PDA

■Construction

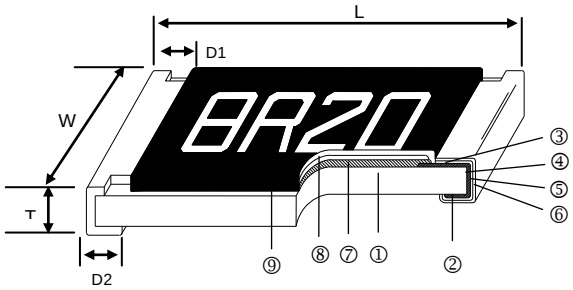

①	Alumina Substrate	④	Edge Electrode	⑦	Resistor Layer
②	Bottom Electrode	⑤	Barrier Layer	⑧	Overcoat
③	Top Electrode	⑥	External Electrode	⑨	Marking

■Dimensions

Unit: mm

Type	Size (Inch)	L	W	T	D1	D2	Weight (g) (1000pcs)
ARG02	0402	1.00±0.05	0.50±0.05	0.30±0.10	0.20±0.10	0.20±0.10	0.54
ARG03	0603	1.60±0.10	0.80±0.10	0.45±0.10	0.30±0.20	0.30±0.20	1.83
ARG05	0805	2.00±0.15	1.25±0.15	0.50±0.10	0.30±0.20	0.40±0.20	4.71
ARG06	1206	3.10±0.15	1.55±0.15	0.55±0.10	0.42±0.20	0.35±0.25	9.02

■Part Numbering

ARG	03	F	T	C	1001	N
Product Type	Dimensions (L×W)	Resistance Tolerance	Packaging Code	TCR (PPM/°C)	Resistance	Marking Code
	02: 0402 03: 0603 05: 0805 06: 1206	B: ±0.1% C: ±0.25% D: ±0.5% F: ±1%	T: Taping Reel B: Bulk	C: ±25 D: ±50	0010: 1Ω 4R70: 4.7Ω 1001: 1KΩ 1004: 1MΩ	: Standard Marking for E96 / E24 N: No Marking

■Derating Curve

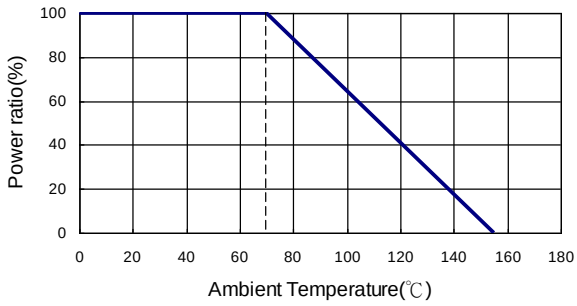

■Standard Electrical Specifications

Item / Type	Power Rating at 70°C	Operating Temp. Range	Max. Operating Voltage	Max. Overload Voltage	Resistance Range				TCR (PPM/°C)
					±0.1%	±0.25%	±0.5%	±1%	
ARG02 (0402)	1/16W	-55 ~ +155°C	50V	100V	4.7Ω – 255KΩ				±25 ±50
ARG03 (0603)	1/10W	-55 ~ +155°C	75V	150V	1Ω - 1MΩ				±25 ±50
ARG05 (0805)	1/8W	-55 ~ +155°C	150V	300V	1Ω - 2MΩ				±25 ±50
ARG06 (1206)	1/4W	-55 ~ +155°C	200V	400V	1Ω - 2.49MΩ				±25 ±50

Operating Voltage=$\sqrt{(P*R)}$ or Max. operating voltage listed above, whichever is lower.
Overload Voltage=2.5*$\sqrt{(P*R)}$ or Max. overload voltage listed above, whichever is lower.
■Viking is capable of manufacturing the optional spec based on customer's requirement.
(Lower Resistance:1~10Ω ; High Power Rating)

■Environmental Characteristics

Item	Requirement	Test Method
Temperature Coefficient of Resistance (T.C.R.)	As Spec.	**MIL-STD-202 Method 304** +25/-55/+25/+125/+25°C
Short Time Overload	ΔR±0.2%	**JIS-C-5201-1 4.13** RCWV*2.5 or Max. overload voltage whichever is lower for 5 seconds
Insulation Resistance	>9999 MΩ	**MIL-STD-202 Method 302** Apply $100V_{DC}$ for 1 minute
Endurance	ΔR±0.5%	**MIL-STD-202 Method 108A** 70±2°C, RCWV for 1000 hrs with 1.5 hrs "ON" and 0.5 hrs "OFF"
Damp Heat with Load	ΔR±0.5%	**MIL-STD-202 Method 103B** 40±2°C, 90~95% R.H. RCWV for 1000 hrs with 1.5 hrs "ON" and 0.5 hrs "OFF"
Bending Strength	ΔR±0.1%	**JIS-C-5201-1 4.33** Bending amplitude 3 mm for 10 seconds
Solderability	95% min. coverage	**MIL-STD-202 Method 208H** 245±5°C for 3 seconds
Resistance to Soldering Heat	ΔR±0.1%	**MIL-STD-202 Method 210E** 260±5°C for 10 seconds
Dielectric Withstand Voltage	By Type	**MIL-STD-202 Method 301** Max. overload voltage for 1 minute
Thermal Shock	ΔR±0.2%	**MIL-STD-202 Method 107G** -55°C ~150°C, 100 cycles
Low Temperature Operation	ΔR±0.5%	**JIS-C-5201-1 4.36** 1 hour, -65°C, followed by 45 minutes of RCWV

RCWV(Rated continuous working voltage)= $\sqrt{(P*R)}$ or Max. Operating voltage whichever is lower

■ **Storage Temperature: 15~28°C; Humidity < 80%RH**

■Soldering Condition

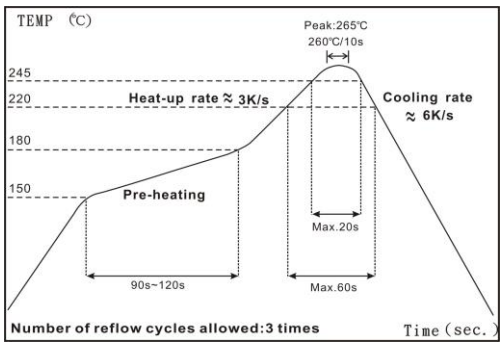

IR Reflow Soldering

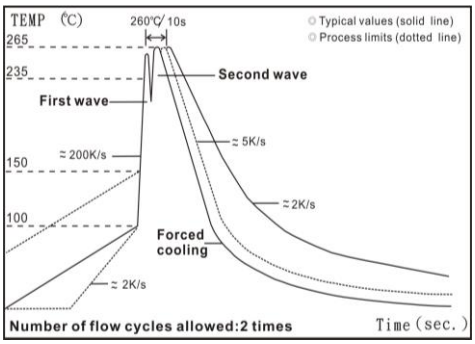

Wave Soldering (Flow Soldering)

(1) Time of IR reflow soldering at maximum temperature point 260°C：10s

(2) Time of wave soldering at maximum temperature point 260°C：10s

(3) Time of soldering iron at maximum temperature point 410°C：5s

■Marking

0603 3digit marking

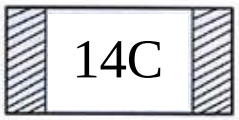

3digit marking for Example: 14C=13K7Ω 13C=13K3Ω

68B=4K99Ω 68X=49.9Ω

Marking Table

Code	E96	Code	E96	Code	E96	Code	E96
01	100	**25**	178	**49**	316	**73**	562
02	102	**26**	182	**50**	324	**74**	576
03	105	**27**	187	**51**	332	**75**	590
04	107	**28**	191	**52**	340	**76**	604
05	110	**29**	196	**53**	348	**77**	619
06	113	**30**	200	**54**	357	**78**	634
07	115	**31**	205	**55**	365	**79**	649
08	118	**32**	210	**56**	374	**80**	665
09	121	**33**	215	**57**	383	**81**	681
10	124	**34**	221	**58**	392	**82**	698
11	127	**35**	226	**59**	402	**83**	715
12	130	**36**	232	**60**	412	**84**	732
13	133	**37**	237	**61**	422	**85**	750
14	137	**38**	243	**62**	432	**86**	768
15	140	**39**	249	**63**	442	**87**	787
16	143	**40**	255	**64**	453	**88**	806
17	147	**41**	261	**65**	464	**89**	825
18	150	**42**	267	**66**	475	**90**	845
19	154	**43**	274	**67**	487	**91**	866
20	158	**44**	280	**68**	499	**92**	887
21	162	**45**	287	**69**	511	**93**	909
22	165	**46**	294	**70**	523	**94**	931
23	169	**47**	301	**71**	536	**95**	953
24	174	**48**	309	**72**	549	**96**	976

Code	A	B	C	D	E	F	G	H	X	Y	Z
Multiplier	10^0	10^1	10^2	10^3	10^4	10^5	10^6	10^7	10^{-1}	10^{-2}	10^{-3}

0603 3digit marking for E24 Example: 101=100Ω 102=1KΩ

E24	10	11	12	13	15	16	18	20	22	24	27	30	33	36	39	43	47	51	56	62	68	75	82	91

0805~2512 4digit marking Example

Resistance	100Ω	2.2KΩ	10KΩ	49.9KΩ	100KΩ
marking	1000	2201	1002	4992	1003

■Packaging

Packing Quantity & Reel Specifications

Unit :mm

Type	ØA	ØB	ØC	W	T	Paper Tape (EA)	Emboss Plastic Tape (EA)
ARG02	178.0±1.0	60.0+1.0	13.5±0.7	9.5±1.0	11.5±1.0	10,000	-
ARG03	178.0±1.0	60.0+1.0	13.5±0.7	9.5±1.0	11.5±1.0	5,000	-
ARG05	178.0±1.0	60.0+1.0	13.5±0.7	9.5±1.0	11.5±1.0	5,000	-
ARG06	178.0±1.0	60.0+1.0	13.5±0.7	9.5±1.0	11.5±1.0	5,000	-

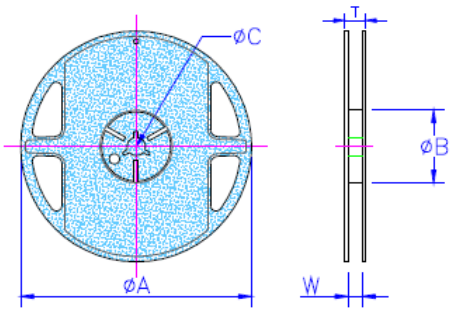

Paper Tape Specifications

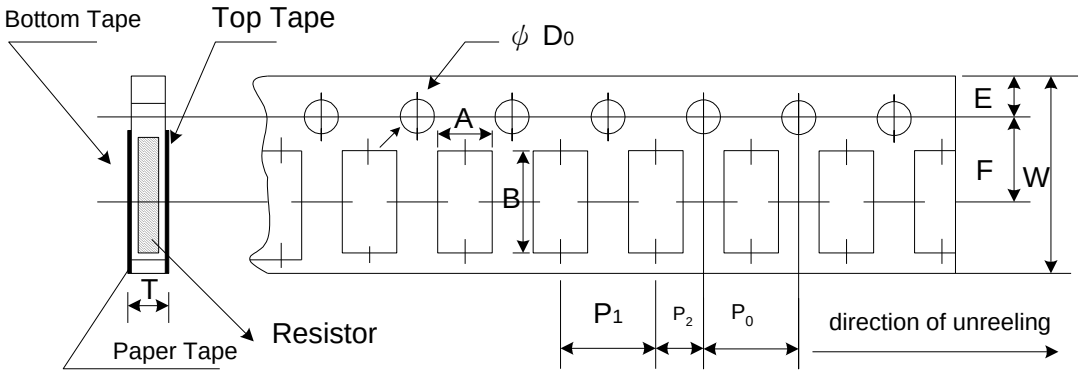

Unit: mm

Type	A	B	W	E	F	P_0	P_1	P_2	$ΦD_0$	T
ARG02	0.70±0.05	1.16±0.05	8.00±0.10	1.75±0.05	3.5±0.05	4.00±0.10	2.00±0.05	2.00±0.05	1.55±0.05	0.40±0.03
ARG03	1.10±0.05	1.90±0.05	8.00±0.10	1.75±0.05	3.5±0.05	4.00±0.10	4.00±0.10	2.00±0.05	1.55±0.05	0.60±0.03
ARG05	1.60±0.05	2.37±0.05	8.00±0.10	1.75±0.05	3.5±0.05	4.00±0.10	4.00±0.10	2.00±0.05	1.55±0.05	0.75±0.05
ARG06	2.00±0.05	3.55±0.05	8.00±0.10	1.75±0.05	3.5±0.05	4.00±0.10	4.00±0.10	2.00±0.05	1.55±0.05	0.75±0.05

- Peel force of top cover tape
- The peel speed shall be about 300mm/min±5%
- The peel force of top cover tape shall be between 8gf to 60gf

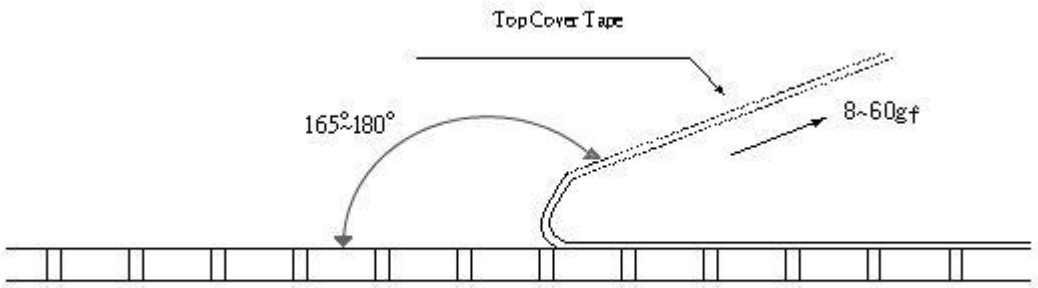

Unit: mm

■Recommend Land Pattern

Unit: mm

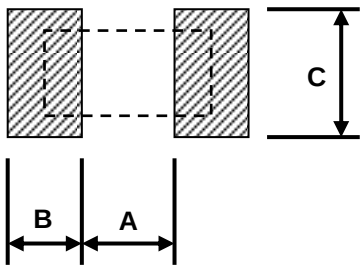

Type	A	B	C
ARG02	0.50	0.50	0.60±0.2
ARG03	0.80	1.00	0.90±0.2
ARG05	1.00	1.00	1.35±0.2
ARG06	2.00	1.15	1.70±0.2

REVISION HISTORY

REVISION	DATE	CHANGE NOTIFICATION	DESCRIPTION
Version A1	May 08, 2015	-	- Correct the element of Top Electrode.
Version A2	May 02, 2016	-	- Modify Storage Temperature. - Remove Material Description.
Version A3	July 19, 2016	-	- Add Resistance Range (±0.1% and 0.25%) - Update requirements of Environmental Characteristics.
Version A4	Nov 10, 2016	-	- Correct the reference standard in Environmental Characteristics.