Oct.1.2026 Copyright 2026 HIROSE ELECTRIC CO., LTD. All Rights Reserved.
In case of consideration for using Automotive equipment / device which demand high reliability, kindly contact our sales window correspondents.

1 CHART-1 POLARIZATION

No. 1	(+)	POWER
No. 2	(+)	SIGNAL
No. 3	(−)	POWER

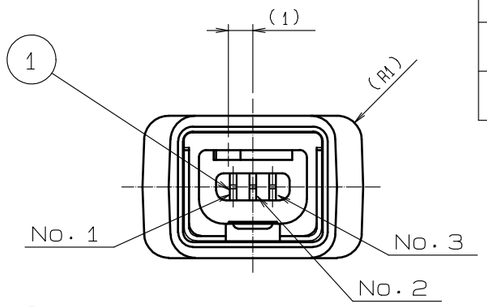

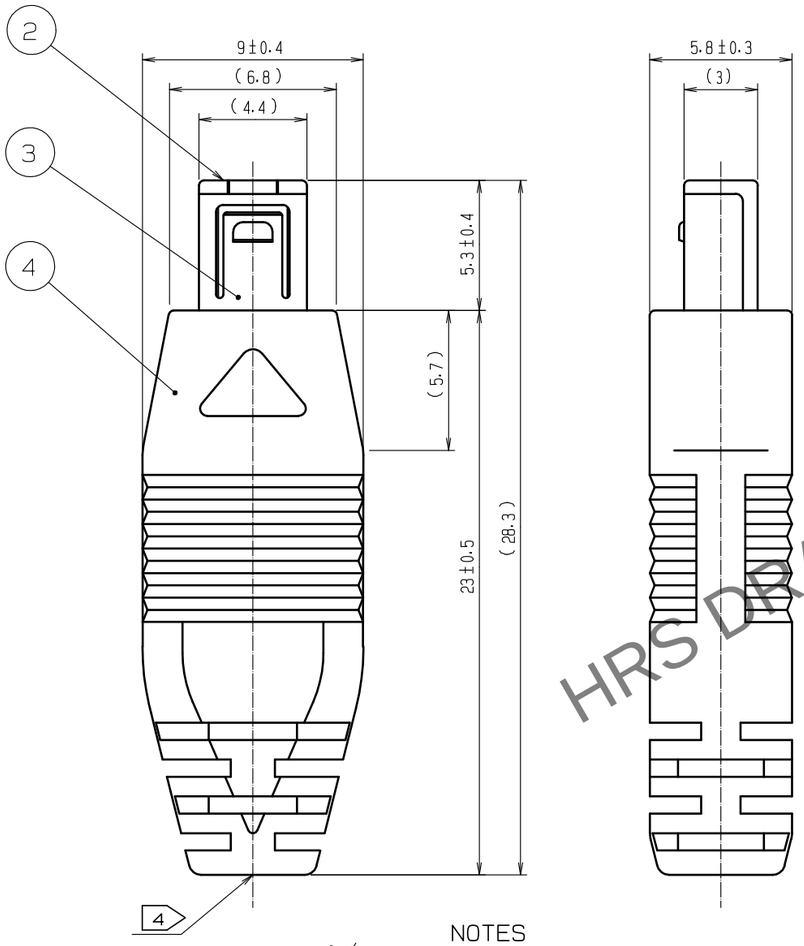

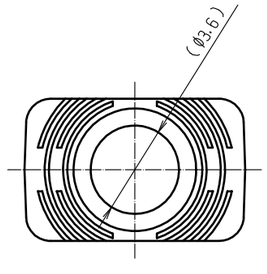

2 CONNECTOR UNIT

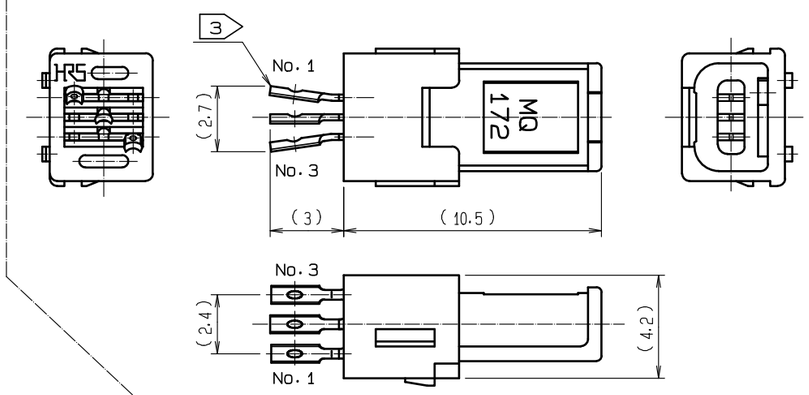

MATED (5:1)

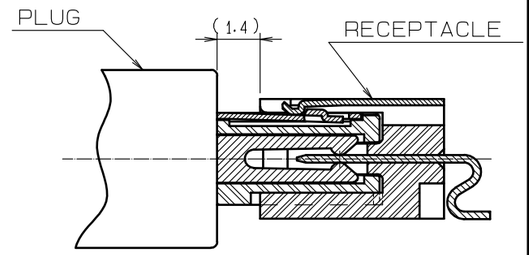

CONSTRUCTION (REFERENCE)

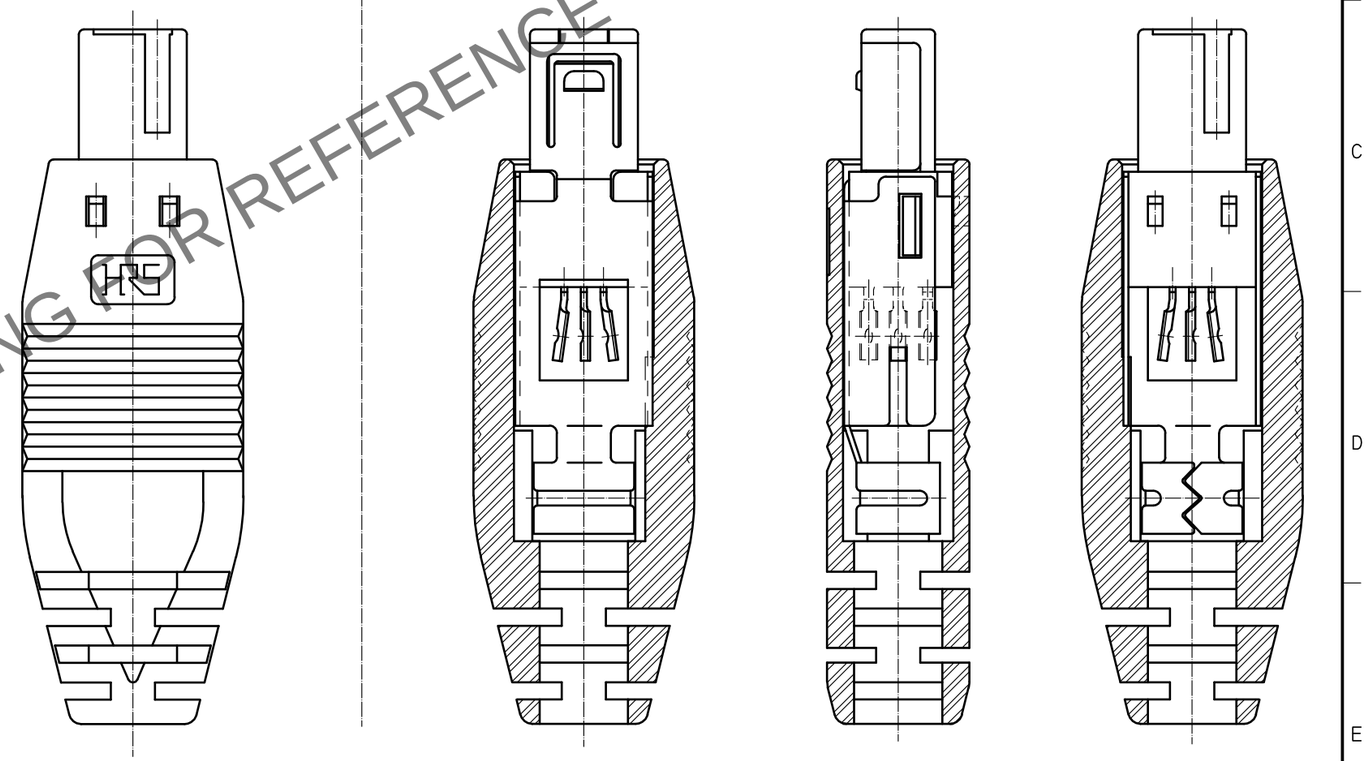

HRS DRAWING FOR REFERENCE

NOTES

1. POLARIZATION IS AS SHOWN ON CHART-1.
2. COMPONENTS PART NO. 3 AND NO. 4 ARE APPENDED PRODUCTS EXCEPT CONNECTOR UNIT (ASSEMBLED COMPONENTS PART NO. 1 AND NO. 2).
3. TERMINAL AREA SHALL BE COVERD WITH SHRINKAGE TUBE AFTER SOLDERING.
4. PROJECTION OF GATE IS 0.8 MAX.
5. DIRECTIONS FOR USE.
   ·PLEASE DO NOT USE FOR THE PURPOSE OF INTERUPTING THE CURRENT.

NO.	MATERIAL	FINISH . REMARKS	NO.	MATERIAL	FINISH . REMARKS
1	COPPER ALLOY	CONTACT AREA : PALLADIUM-NICKEL 0.7μm + GOLD 0.2μm LEAD AREA : GOLD 0.03μm UNDER PLATING : NICKEL 1.27μm	4	POLYAMIDE	BLACK UL94V-2
			3	STAINLESS STEEL	
			2	POLYAMIDE	BLACK UL94V-0

UNITS	SCALE		COUNT	DESCRIPTION OF REVISIONS	DESIGNED	CHECKED	DATE
mm	4 : 1	△0					

HIROSE ELECTRIC CO., LTD.

APPROVED	NM. NISHIMATSU	15. 10. 27
CHECKED	KN. ICHIKAWA	15. 10. 27
DESIGNED	TS. ITO	15. 10. 27
DRAWN	AK. AKIYAMA	15. 10. 27

DRAWING NO.	EDC-120678-30-00
PART NO.	MQ172-3SA-CV(30)
CODE NO.	CL206-0951-7-30

△0 1/1