承认 No.	JHNE-CG-T-D418

Specification Approval Sheet

承认书

Dear customers, 尊敬的客户：

Please confirm the specification approval of Jianghai Supercapacitor. 请确认江海超级电容规格承认书

Customer Approval 客户承认	Signature(签字)：	Date(日期)：
	Company Name(公司名称)：	
	Company Stamp(公司盖章)：	

南 通 江 海 电 容 器 股 份 有 限 公 司

NANTONG JIANGHAI CAPACITOR CO., LTD

南 通 江 海 储 能 技 术 有 限 公 司

NANTONG JIANGHAI NEW ENERGY CO., LTD

地址：中国. 江苏省南通市通州区南通高新技术产业开发区希望大道 998 号

ADD: No.998 Xiwang Road, Nantong High-Tech industrial Development Zone Tongzhou District Nantong City,Jiangsu Province P.R. CHINA

TEL : +86 – 0513 - 86726066 FAX : +86 – 0513 – 86726064 P.C. 226361

E-MAIL: xujianhong@jianghai.com

Specification of Jianghai Supercapacitor

江 海 超 级 电 容 规 格 书

Part Number: SCCDPR2R7106FRH100025EP

Product Spec.: SRP 2.7V10F

Prepared 拟制	Checked 审核	Approved 批准
		

AMENDMENT RECORDS

修改履历

Ver. No. 版本	Description 内容	Date 日期	Checked 审核
A00	Initial Release	17/08/2023	杨引

1. General Characteristics/一般特性

No.	Items/项目	Criteria/参数值	Remark/备注
01	Operating Temperature Range 工作温度范围	-40～+70℃	（-40~+85℃@2.3V）
02	Rated Voltage 额定工作电压	2.7 V	
03	Surge Voltage 浪涌电压	2.85V	
04	Rated Capacitance 额定容量	10 F	
05	Capacitance Tolerance 容差范围	0～+30%	
06	ESR_{AC} 交流内阻	45 mΩ	1KHz
07	ESR_{DC} 直流内阻	90 mΩ	
08	Rated Current 额定电流	2.3 A	$I=\frac{C\cdot U}{2(\Delta t+ESR_{DC}\cdot C)}$，$\Delta t=5s$
09	Peak Current 峰值电流	7.1 A	$I=\frac{C\cdot U}{2(\Delta t+ESR_{DC}\cdot C)}$，$\Delta t=1s$
10	Short Circuit Current 短路电流	30 A	$I=\frac{U}{ESR_{DC}}$
11	Leakage Current 漏电流	0.030 mA 2.0 mA	72hrs 30min
12	Stored Energy 存储能量	10.13 mwh	$E=\frac{½CU^2}{3600}$
13	Specific Energy 能量密度	3.6 wh/kg	$\frac{E}{mass}$
14	Usable Specific Power 可用功率密度	3.5 kw/kg	$P_d=\frac{0.12U^2}{ESR_{DC}\cdot mass}$
15	Impedance Match Specific Power 峰值功率密度	7.2 kw/kg	$P_{max}=\frac{0.25U^2}{ESR_{DC}\cdot mass}$
16	Storage temperature Range 存储温度范围	-40～+70 ℃	
17	Self-discharge 自放电	≥2.16V	
18	Cycle Life 循环寿命	≥500,000 cycles	
19	Weight 重量	2.8 ±0.2 g	

2.Environmental Characteristics/环境特性

No.	Items/项目	Specification/Condition/规格/条件
01	Temperature Characteristics 温度特性	｜△C/C｜≤10%，ESR_{AC}≤ specified ESR at +70℃ +70℃，容量变化：初始值的 10%以内，ESR_{AC}：不超过规格值 ｜△C/C｜≤30%，ESR_{AC}≤ 4 times of specified ESR_{AC} at -40℃ -40℃，容量变化：初始值的 30%以内，ESR_{AC}：不超过 4 倍规格值
02	High temperature loaded 高温负荷	｜△C/C｜≤30%，ESR_{AC}≤ 4 times of specified ESR_{AC} at +70℃/ 1000hrs/Rated voltage +70℃，额定电压下，负荷 1000h， 容量变化：初始值的 30%以内，ESR_{AC}：不超过 4 倍规格值
03	High temperature storage 高温存储	｜△C/C｜≤30%, ESR_{AC}≤ 2 times of specified ESR_{AC} at +70℃/1000hrs +70℃，高温存储 1000h， 容量变化：初始值的 30%以内， ESR_{AC}：不超过 2 倍规格值
04	Humidity Resistance 稳态湿热	Storage at +40℃±2，90--95%RH，240h，｜△C/C｜≤30%, ESR_{AC}≤ 2 times of specified ESR_{AC} +40℃±2, 90--95%RH，高温高湿存储 240h，容量变化：初始值的 30%以内，ESR_{AC}：不超过 2 倍规格值

3. Jianghai P/N：江海代码

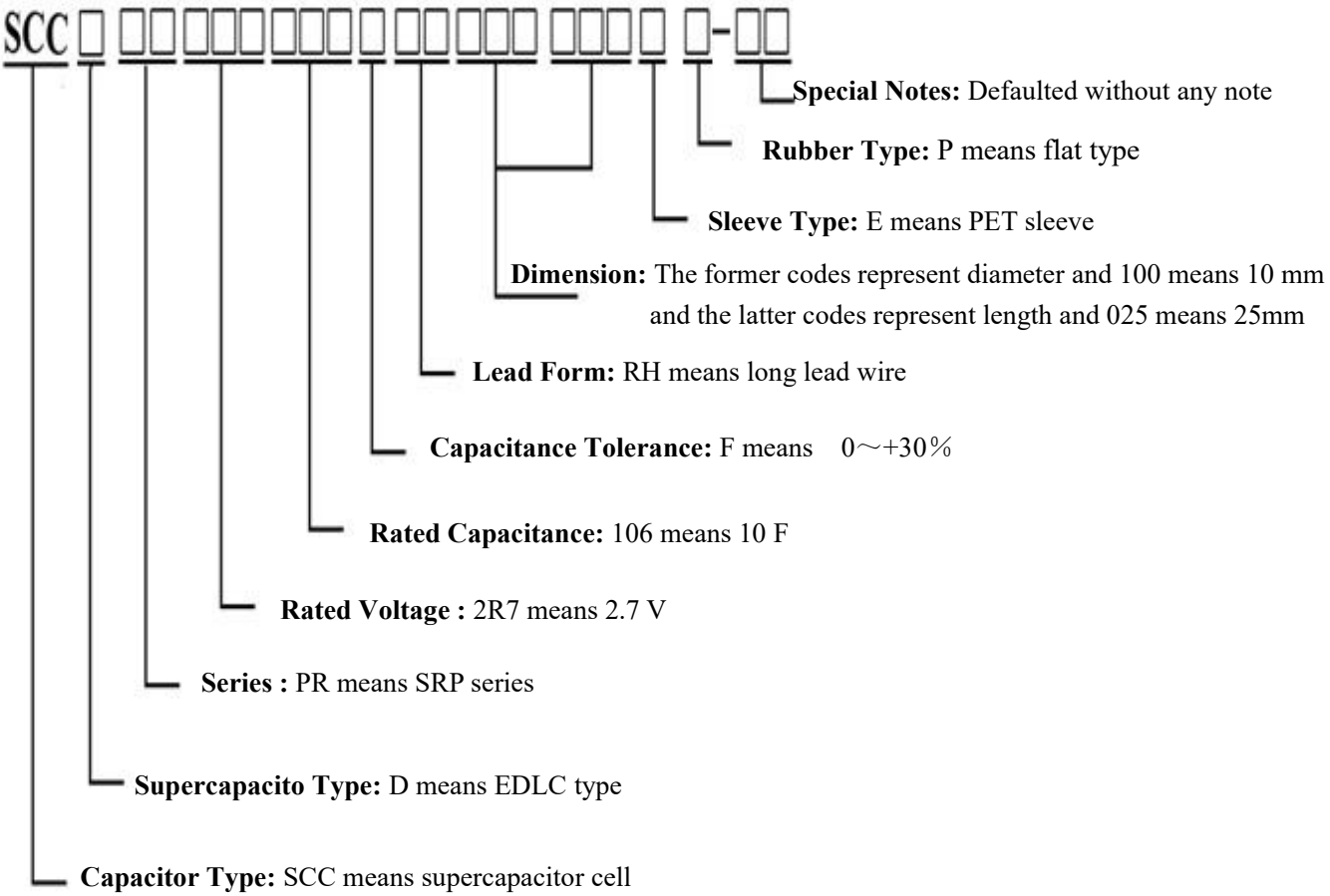

4.Product Dimensions: 产品尺寸

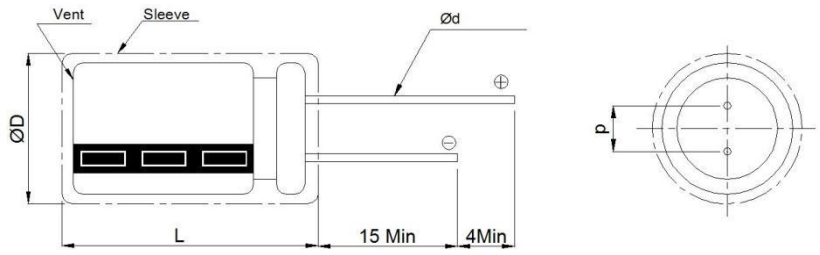

Items	Criteria	Items	Criteria
ϕD	10+0.5mm	L	25±2 mm
p	5.0±0.5 mm	ϕd	0.6±0.05 mm

5.Packing Procedures 包装方式

Inner Box						Outer Case					
Size(mm)			Bag	Pcs/Bag	Qty.	Size(mm)			Boxes	Pcs/Box	Qty.
A	B	H				A	B	H			
280	210	145	5	200	1000	450	300	320	4	1000	4000

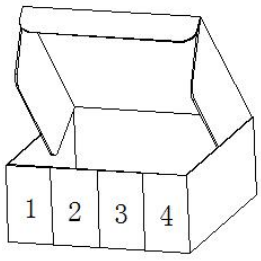

Inner Box

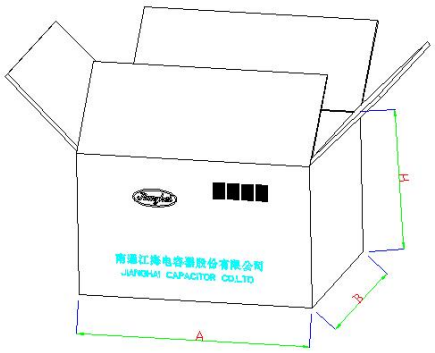

Outer Case

6.Test Method 测试方法

6.1 Capacitance 容量

Capacitance is tested by constant current discharge method.

通过恒流放电法测试容量。

6.1.1 Test circuit diagram 测试电路图

Carry out the capacitance test according to the test circuit diagram in Figure 1.

按照图 1 的测试电路图进行容量测试。

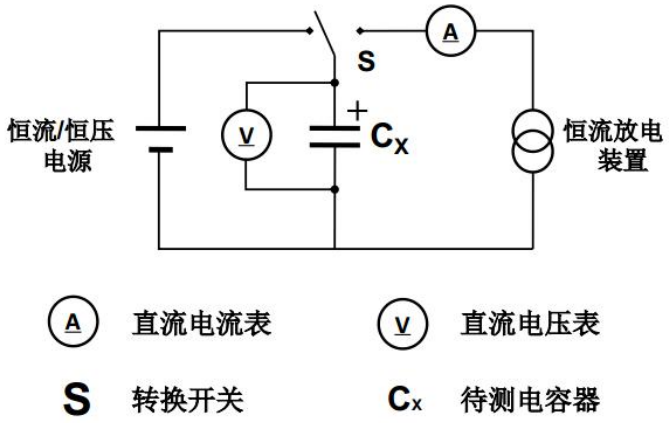

Figure 1 Capacitance test circuit diagram

图1 容量测试电路图

6.1.2 Measurement process 测试过程

—— Set DC voltage of constant current/constant voltage power source as rated voltage (U_R).

——恒流/恒压源的直流电压设定为额定电压（U_R）。

——According to 10 mA/F and rater capacitance C_R, set constant current value (I) for charging and discharging.

——以10 mA/F为基准，根据被测电容额定容量C_R，设置充电和放电的恒流电流值I。

——Charge the capacitor with constant current to rated voltage, and continuous 30 min. After charging, discharge with the same current to 0.1V.

——对被测电容进行恒流充电至额定电压U_R，保持充电30 min。充电结束后，以相同的电流进行恒流放电至0.1V。

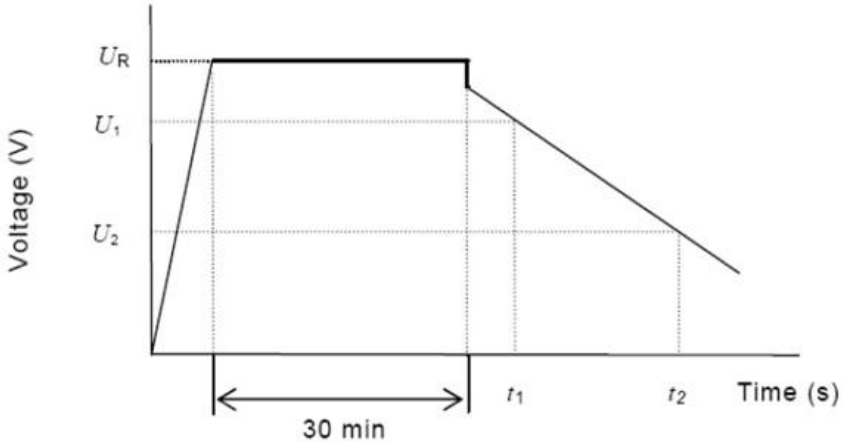

Figure 2 Schematic diagram of capacitance test
图2 容量测试示意图

——Measure the time t_1 and t_2 for the voltage across the capacitor from U_1 to U_2, as shown in Figure 2, and calculate the capacitance value (C) according to the following formula:
——测量电容器两端电压从U_1到U_2的时间t_1和t_2，如图2所示，根据下列等式计算电容量值（C）：

$$C = \frac{I \times (t_2 - t_1)}{U_1 - U_2}$$

Other 其他
C is the capacitance (F);
C为容量(F)；
I is the discharge current (A);
I为放电电流(A)；
U_1 is the measurement starting voltage (V), $0.8U_R$;
U_1为测量初始电压(V)，$0.8U_R$；
U_2 is the measurement end voltage (V), $0.4U_R$;
U_2为测量终止电压(V)，$0.4U_R$；
t_1 is the time from discharge start to reach U_1 (s);
t_1为放电初始电压到U_1 (s)的时间；
t_2 is the time from discharge start to reach U_2 (s).
t_2为放电初始电压达U_2 (s)的时间。

6.2 ESR_{AC} 交流内阻
6.2.1 Test circuit diagram 测试电路图
按照图 3 的测试电路图进行交流内阻测试。
Carry out the AC internal resistance test according to the test circuit diagram in Figure 3.

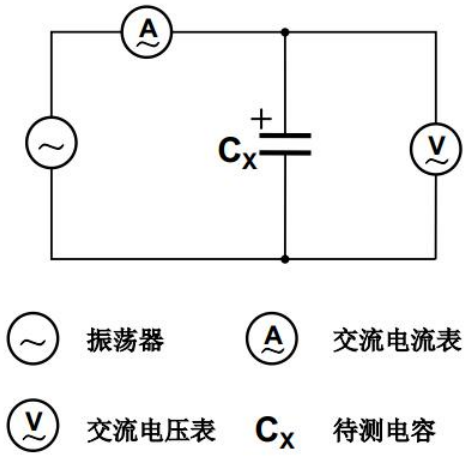

Figure 3 AC internal resistance test circuit diagram

图 3 交流内阻测试电路图

6.2.2 Measurement process 测试过程

The AC internal resistance of capacitor should be calculated by the following formula:

电容器的交流内阻ESR_{AC}应通过下式计算：

$$ESR_{AC}=\frac{U_{AC}}{I_{AC}}$$

Other 其他

ESR_{AC} is the a.c. internal resistance (Ω);

ESR_{AC} 是交流内阻(Ω)；

U is the effective value of a.c. voltage (V r.m.s.);

U是交流电压有效值(V r.m.s.)；

I is the effective value of a.c. current (A r.m.s.).

I是交流电流有效值(A r.m.s.)；

The frequency of the measuring voltage shall be 1 kHz.

测量电压的频率，应为1kHz；

The a.c. current shall be from 5 mA~100mA.

交流电流应为5 mA~100mA；

6.3 ESR_{DC} 直流内阻

6.3.1 Test circuit diagram 测试电路图

Carry out the DC internal resistance test according to the test circuit diagram in Figure 1.

按照图 1 的测试电路图进行直流内阻测试。

6.3.2 Measurement process 测试过程

——Set DC voltage of constant current/constant voltage power source as rated voltage (U_R).

——恒流/恒压源的直流电压设定为额定电压（U_R）。

——According to 10 mA/F and rated capacitance C_R, set constant current for charging and

discharging.

——以10 mA/F为基准，根据被测电容额定容量(C_R)，设置充电和放电的恒流电流值（I）。

——Charge the capacitor with constant current to rated voltage, and continuous 30min, After charging, discharge with the same current to 0.1 V.

——对被测电容进行恒流充电至额定电压(U_R)，保持充电30 min。充电结束后，以相同的电流进行恒流放电至0.1 V。

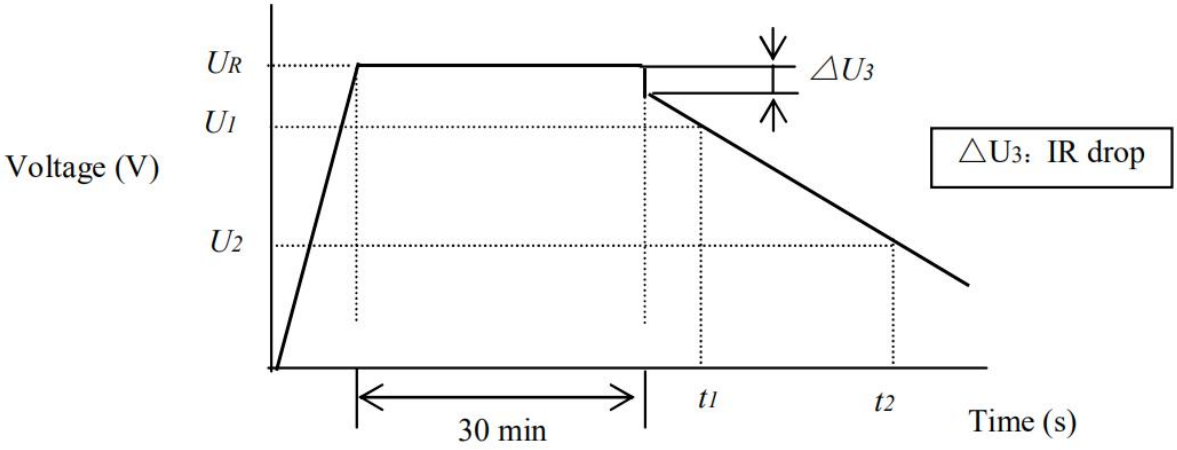

Figure 4 Schematic diagram of DC internal resistance test

图4 直流内阻测试示意图

——Use a voltage recorder to record the change ΔU_3 of the instantaneous 30 ms voltage drop at the transition terminal voltage of the capacitor charging and discharging, as shown in Figure 4. The DC internal resistance of capacitor shall be calculated by the following formula:

——用电压记录仪记录电容器充放电转换端电压瞬间30 ms电压降的变化量ΔU_3，如图4所示。根据下式计算直流内阻 ESR_{DC}：

$$ESR_{DC} = \frac{\Delta U_3}{I}$$

Other 其他

ESR_{DC} is the DC- ESR (Ω);

ESR_{DC} 是直流内阻；

ΔU_3 is the voltage drop during first 30 ms of discharge (V)；

ΔU_3 是放电后 30 毫秒的电压降(V)；

I is the discharge current (A);

I为放电电流(A)。

6.4 Leakage Current 漏电流

6.4.1 Test circuit diagram 测试电路图

Carry out the leakage current test according to the test circuit diagram in Figure 5.

按照图 5 的测试电路图进行漏电流测试。

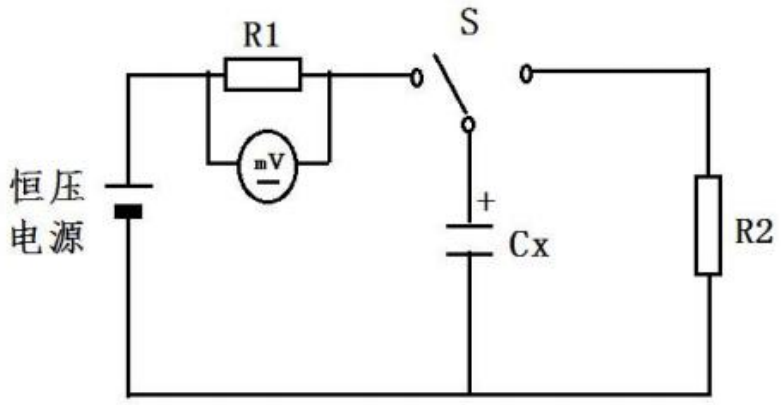

Figure 5 Leakage current test circuit diagram

Note: R1 is the charging resistance; R2 is the discharging resistance; S is the switch; Cx is the measured capacitor.

图5 漏电流测试电路图

备注：R_1为充电电阻；R_2为放电电阻；S为切换开关；C_x为被测电容。

6.4.2 Measurement process 测试过程

——The measured capacitor (C_x)is discharged through R_2. In order to achieve complete discharge, the discharge time should not be less than 1h, and the discharge resistor R_2 should be selected according to the following formula

——通过R_2对被测电容（C_x）进行放电。为实现完全放电，放电时间不低于1 h，放电电阻R_2参照下述公式进行选择：

$$R2 \le \frac{3600}{5C_R}$$

—— Set DC voltage of constant current/constant voltage power source as rated voltage (U_R).

——恒流/恒压源的直流电压设定为额定电压（U_R）；

——The measured capacitor (C_x) starts to be charged through R_1. After the capacitor voltage is charged to U_R, continues to charge for 72h, records the voltage drop U_{R1} on R_1, and calculates the leakage current (I_{lk}) at the corresponding time according to the following formula:

——通过R_1对被测电容（C_x）开始充电，电容电压充电至U_R后，继续保持充电72 h，记录R_1上的电压降U_{R1}，按照下述公式计算对应时间的漏电流（I_{lk}）：

$$I_{lk} = \frac{U_{R1}}{R1}$$

——Select the appropriate protective resistance R_1 according to Table 1.

——按表1选择合适的保护电阻R_1。

Table1 select protective resistance according to the capacitance

表1 根据电容器容量选择对应保护电阻值

标称容量（F）	<7	7~80	>80
保护电阻（Ω）	100	10	1

6.5 Self-discharge 自放电

6.5.1 Measurement process 测试过程

—— Before the measurement, the capacitor should be fully discharged and short-circuited for 6h.

——测量之前，电容器应充分放电，并短路6 h；

——According to 10 mA/F and rated capacitance C_R, set constant current for charging and discharging.

——以10 mA/F为基准，根据被测电容额定容量C_R，设置充放电的恒流电流值（I）；

——Charge the capacitor with constant current to the rated voltage by the DC power supply, and charge the capacitor with constant voltage for 8 h;

——通过直流电源对电容进行恒流充电至额定电压，恒压充电8 h；

——Test the terminal voltage (U_c) of capacitor after 24 h at open circuit under room temperature.

——在室温下将电容器开路 24 小时后，测量电容器两端的电压(U_c)。

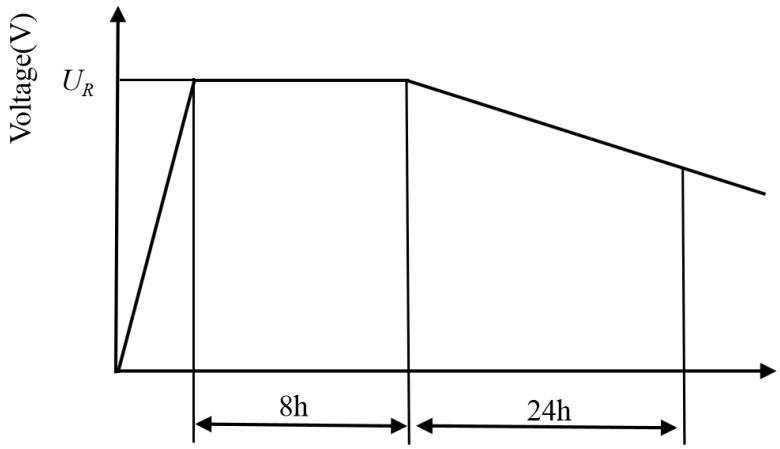

Figure 6 Schematic diagram of self-discharge test

图 6 自放电测试示意图

7.Handling Precautions and Guidelines 注意事项和使用指导

For safety application, please contact JIANGHAI directly for any technical specifications, handling precautions and guidelines critical to application.

为安全起见，当设计的设备需要使用电容器时，请与江海直接联系咨询技术规格、安装注意事项和使用要求。

7.1 Precautions 注意事项

(1) Prohibition of disassembly 禁止拆卸

The disassembling may generate internal short circuit in the cell, which may cause gassing, leakage or other problems.

拆卸电容会导致内部短路，可能导致产气，泄漏或其他问题。

Electrolyte is harmful: In case the electrolyte comes into contact with the skin, or eyes, physicians shall flush the electrolyte immediately with fresh water and medical advice is to be sought.

电解液是有害的：如果电解液接触到皮肤或眼睛，应立即用清水冲洗并寻求医生的治疗。

(2) Prohibition of dumping of cells into fire 禁止将电容投入火中

These may cause firing of the cells, which is very dangerous and is prohibited.

这可能会导致电容起火，这是非常危险的，是被禁止的。

(3) Prohibition of cells immersion into liquid 禁止将电容浸入液体

The cells shall never be soaked with liquids such as water, seawater, drinks such as juices, coffee or others.

电容不能用水、海水、果汁、咖啡或其他饮料等液体浸泡。

(4) Prohibition of use of damaged cells 禁止使用损坏的电容

The cells might be damaged during shipping by shock. If any abnormal features of the cells are found such as damages in the cell package, smelling of an electrolyte, an electrolyte leakage and others, the cells shall never be used any more.

在运送过程中，电容可能因受到冲击而损坏。如果发现电容有任何异常情况，如包装破损、电解液气味、电解液泄漏等，请勿使用该电容。

The Cells with a smell of the electrolyte or a leakage shall be placed away from fire to avoid firing.

有电解液味道或泄漏的电容应放置在远离火的地方，以避免起火。

7.2 Handling Guidelines 使用指导

(1) It is not suitable that cell is used under such conditions: AC circuit and wave filtering.

不可以用于以下场合：交流电路和滤波电路。

(2) Work voltage of cell should not exceed Max. work voltage of capacitor during using. Otherwise, will shorten shelf life, even cause swelling, leakage or crack.

电容的工作电压不应超过电容额定最高工作电压。否则，会导致缩短使用寿命，甚至引起

气胀、泄漏或开裂。

(3) Please check the polarity before using. If working under reverse polarity, cell will not only shorten sevice life, but also heavy damage, such as swelling, electrolyte leakage etc.

使用前请检查极性。如果在反极性下工作，电容不仅会缩短使用寿命，甚至还会造成严重的损坏，如气胀、电解液泄漏等。

(4) Environment 环境

Work temperature will have an influence on sevice life of cell. As usual, higher work temperature will shorten sevice life. So, it is better that cell works under as possible as low environmental temperature.

工作温度会影响电容的使用寿命。通常，较高的工作温度会缩短使用寿命。因此，最好是在低环境温度下工作。

Work temperature of cell should consider internal work temperature in the machine and temperature rise when cell works.

电容的工作温度应考虑整机内部工作温度和电容工作时的内部温升。

(5) IR dropIR 下降

When main power sources shut down, cell will change into work mode from failure mode, at the same time, OCV will decrease due to IR drop. So please choose proper product type according to internal resistance specified in product datasheet and applied current.

当主电源关闭，电容会从电源失效检测模式转变为后备电源工作模式，此时由于瞬间启动电流和电容内阻会导致开路电压下降。因此，请根据产品规格书中的内阻和实际应用电流选择合适的产品类型。

(6) Cells in series connection 串联连接的电容

When cells in series connection for higher work voltage, it should be assured that work voltage of any single cell must not exceed Max. work voltage of single cell, otherwise, will shorten service life, even cause swelling, leakage or crack.

当多个单体电容串联使用以提高工作电压时，应保证每个电容的工作电压不得超过电容的最大工作电压，否则会缩短使用寿命，甚至引起气胀、泄漏或开裂。

(7) Soldering 焊接

Manual Soldering: The recommended temperature of the soldering rod tip is less than 350 °C and the soldering duration should be less than 4 seconds. Minimize the time that the soldering iron is in direct contact with the terminals of the capacitor, as excessive heating of the leads may lead to higher ESR.

手工焊接：推荐的钎头温度低于 350 °C，焊接时间不超过 4 秒。尽量缩短烙铁与电容器端子直接接触的时间，因为引线过热可能导致更高的 ESR。

Reflow Soldering : Do not use reflow soldering, infrared or convection methods on EDLC.

回流焊：不要在 EDLC 上使用回流焊、红外线或对流方法。

Wave Soldering : Use a maximum preheating time of 60 seconds for PC board 0.8mm or thicker.

Preheating temperature should be limited to less than 130 °C.

波峰焊：对于 0.8 毫米或更厚的 PC 板，最长预热时间为 60 秒。预热温度应限制在 130 °C 以下。

Use the following table for wave soldering on leads only:

仅在导线上使用下表进行波峰焊接：

Soldering Bath Temperature(°C)	Recommended Solder Exposure (s)	Maximum Solder Exposure(s)
220	7	9
240	7	9
250	5	7
265	3	5

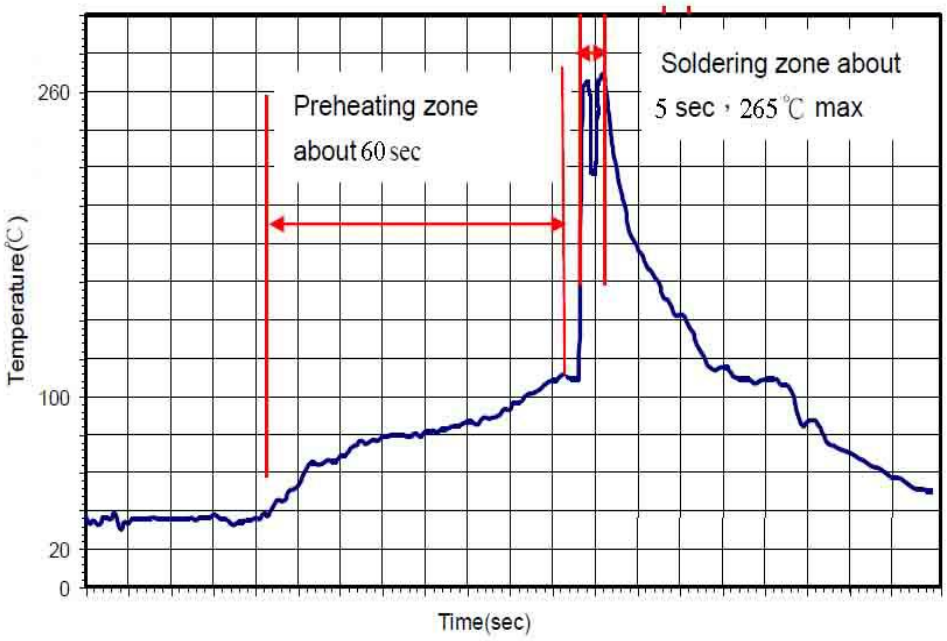

（8）Storage 存储说明

It is recommended that EDLC be stored at ambient temperature of 5℃ to 35℃ and a relative humidity of 75% or below.

建议 EDLC 保存在环境温度 5℃~35℃，相对湿度 75%或以下。

If the product has not been used for 2years or more, please confirm the product performance or contact us before use, as its characteristics may have been affected by environmental conditions.

如果产品放置 2 年或 2 年以上未对其施加电压，请在使用该零件前确认产品性能或者与我们联系，因为其特性可能受到环境条件的影响。