连云港美华电子科技有限公司
Lianyungang MEIHUA Electronics Technology Co., Ltd

产品规格书
DATA SHEET

Part No：MHT126WDT-C65
REV.2

本产品符合 ROHS 指令有关限制有害物质的环保要求.

日期 DATE	拟制 PREPARED	审核 VERIFIED	批准 APPROVED
2026-04-11	Liu		Leo
客户签回　CUSTOMER'S APPROVAL			

电　话 Tel：0518-83286000
传　真 Fax：0518-83696699
邮件 E-mail：sales@lygmh.com.cn
网　址 Web：http://www.lygmh.com.cn
地址 ADD：中国·江苏省连云港市灌南经济开发区北环路
North Around Road, Guannan EDA, Lianyungang City, Jiangsu Province China.

产品外观尺寸 PACKAGE DIMENSIONS

Top view

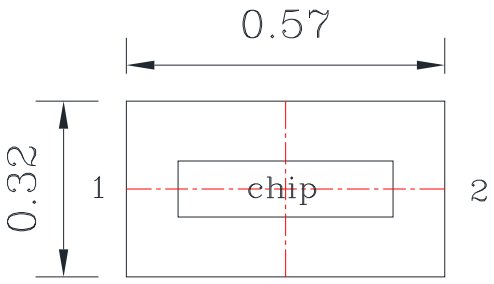

Side view

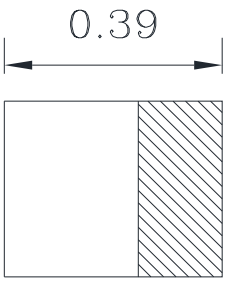

Side view

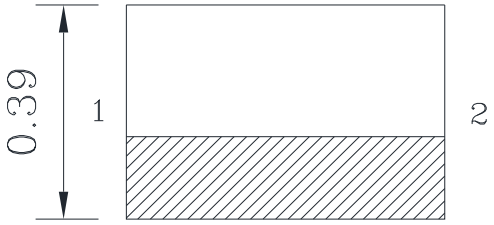

Polarity

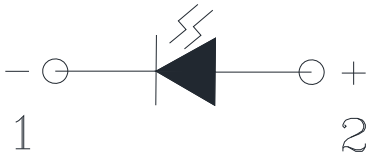

Bottom view

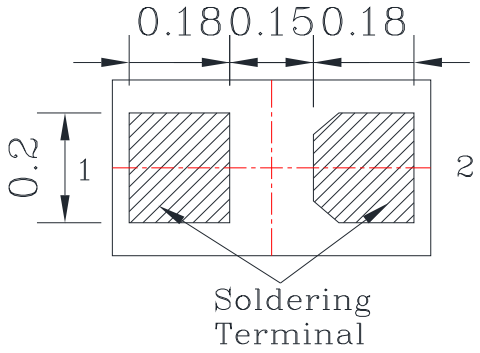

Recommended Solder Pad

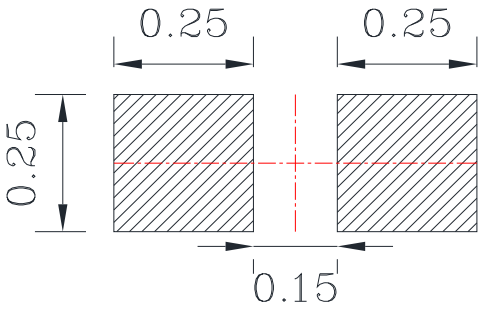

注意 Notes :

1. 所有尺寸均为 mm(英寸)。 All dimensions are in millimeters. (inches)
2. 如无特殊说明，公差为 0.10mm(0.004")。Tolerance is ±0.10mm (0.004") unless otherwise specified.

产品特性 Features

- 高可靠性和高稳定性
  High intensity and reliability
- 高品质、和低功耗、低成本
  High quality, Low power requirement and low cost
- IC 易兼容、易装配
  IC compatible, Easy assembly
- 符合 RoHS 指令要求
  ROHS COMPLIANC
- 无铅产品
  Pb FREE PRODUCTS
- 静电承受能力 1000V (HBM)
  ESD 1000V (HBM).

产品特征 Descriptions

- 0201 规格封装
  0201 package
- 正面发光
  Top view LED
- 胶体颜色：黄色雾状
  Lens Color： Yellow Diffused.
- 发光颜色 Emitted color：
  1. 白色: White
  2.
  3.
  4.
  5.
- 晶片材质 Chips materials：
  1. InGaN
  2.
  3.
  4.
  5.

极限参数 Absolute Maximum Ratings(Ta=25℃)

参数 Parameter	符号 Symbol	极限值 Rating	单位 Unit
单字节功耗 Power Dissipation Per Segment	Pd	60	mW
最大峰值电流 Peak Forward Current Per Segment （1/10 duty cycle，0.1ms pulse width）	I_{PF}	40	mA
最大使用电流 Continuous Forward Current Per segment	I_{AF}	20	mA
反向电压 Reverse Voltage	V_R	5	V
工作温度 Operating Temperature Range	T_{OPR}	-40℃ to +85℃	
储藏温度 Storage Temperature Range	T_{STG}	-40℃ to +85℃	

光电特性 Optical-Electrical Characteristic(Ta=25℃)

符号 Symbol	参数 Parameter	测试条件 Test Condition	最小 Min	标准 Typ	最大 Max	单位 Unit
V_F	正向压降 Forward Voltage	I_F = 5mA	2.5	-	3.1	V
I_R	反向漏电流 Reverse Current	VR= 5V	-	-	10	uA
Ra	显色指数 Color rendering index	I_F = 5mA	70	-	-	-
CCT	色温 Color Temperature	I_F = 5mA	4450	-	6750	K
CIE	色坐标 Chromatic coordinates	I_F = 5mA	-	0.3454	-	-
			-	0.3581	-	
2θ1/2	半视角 Half Intensity Angle	I_F = 5mA	-	120	-	deg
I_V	发光强度 Luminous Intensity	I_F = 5mA	180	-	450	mcd

注意 Notes :

1. 发光强度公差为±10%。Tolerance of Luminous Flux ±10%.
2. 正向压降公差为±0.1V。Tolerance of Forward Voltage: ±0.1V.

发光强度等级 Bin Range of Luminous Flux(Iv)

等级 Bin Code	最小值 Min	最大值 Max	单位 Unit	条件 Condition
S1	180	228	mcd	@5mA
S2	228	280	mcd	@5mA
T1	280	360	mcd	@5mA
T2	360	450	mcd	@5mA

注意 Note:

亮度公差范围：±10%。 Tolerance of Luminous Intensity: ±10%.

电压等级 Bin Range of Forward Voltage(V)

等级 Bin Code	最小值 Min	最大值 Max	单位 Unit	条件 Condition
K6	2.5	2.65	V	@5mA
K7	2.65	2.8	V	@5mA
K8	2.8	2.95	V	@5mA
K9	2.95	3.1	V	@5mA

注意 Note:

电压公差范围：±0.1V。 Tolerance of Forward Voltage: ±0.1V.

色坐标等级 Bin Range of Chromaticity Coordinates

等级 Bin Code	X 坐标 CIE_x	Y 坐标 CIE_Y	等级 Bin Code	X 坐标 CIE_x	Y 坐标 CIE_Y
E1 6030-6750	0.3156	0.3014	E2 5490-6030	0.3255	0.3203
	0.3096	0.3064		0.3195	0.3253
	0.3195	0.3253		0.3294	0.3442
	0.3255	0.3203		0.3354	0.3392
E3 5120-5490	0.3354	0.3392	E4 4840-5120	0.3454	0.3581
	0.3294	0.3442		0.3394	0.3631
	0.3394	0.3631		0.3493	0.382
	0.3454	0.3581		0.3553	0.377
E5 4620-4840	0.3553	0.377	E6 4450-4620	0.3652	0.3959
	0.3493	0.382		0.3592	0.4009
	0.3592	0.4009		0.3692	0.4198
	0.3652	0.3959		0.3752	0.4148

注意 Notes:

1. 该值基于 5mA 的驱动电流。The value is based on driving current by 1000mA.
2. 色度坐标公差：±0.01。Tolerance of Chromaticity Coordinates: ±0.01.

C.I.E.1931 色度图

The C.I.E. 1931 Chromaticity Diagram and Spectrum Distribution

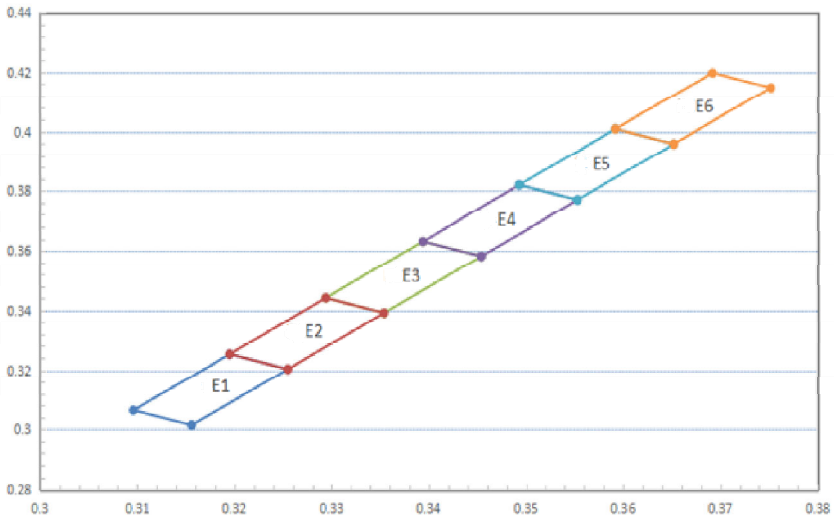

光电特性图 Typical Electrical Characteristic Curves(Ta=25℃)

Fig.1-Forword Voltage Shift vs. Juntion Temperature

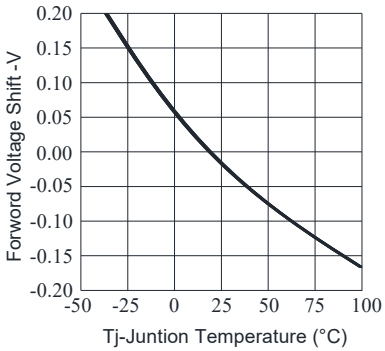

Fig.2-Relative Luminous Intensity vs. Forword Current

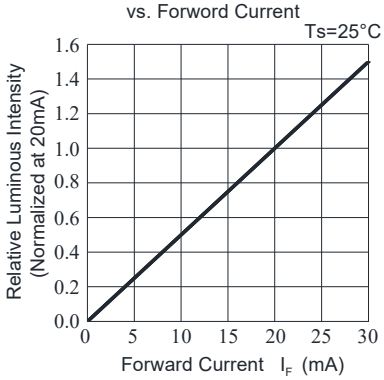

Fig.3-Relative Luminous Intensity vs.Juntion Temperature

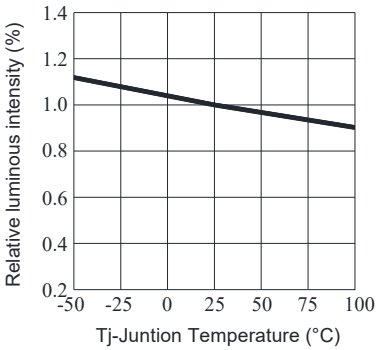

Fig.4-Forward Current vs. Forward Voltage

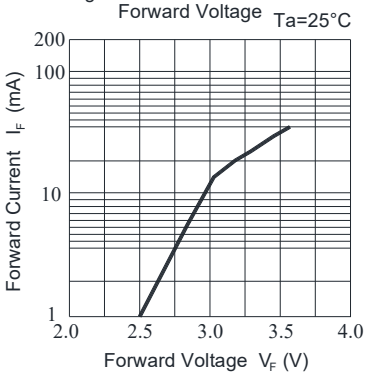

Fig.5-Max.Driving Forward Current vs.Soldering Temperture

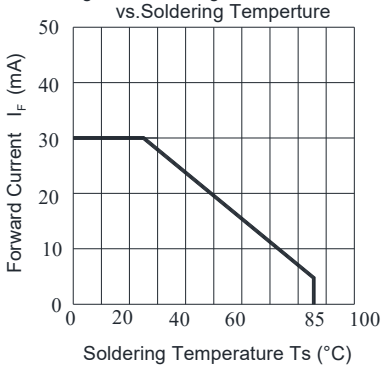

Fig.6-Radiation Diagram

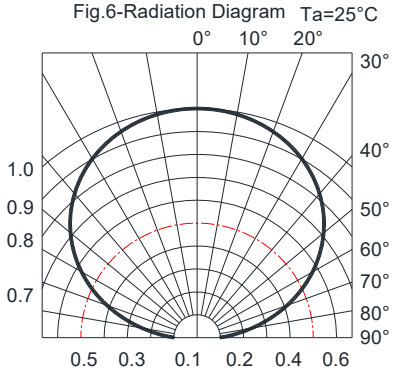

注意 Notes :

1. 发光强度取平均值。Luminous Intensity is an average value.
2. 发光强度公差：±10％。Tolerance of Luminous Intensity: ±10％.
3. 正向电压公差：± 0.1V。Tolerance of Forward Voltage: ± 0.1V.

光谱图 Spectrum Distribution

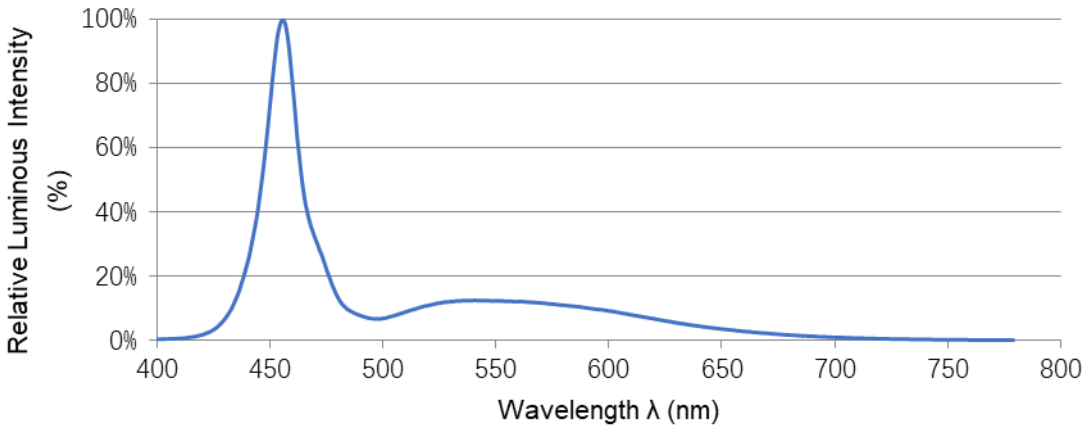

标签 Label

连云港美华电子科技有限公司

P/N: MHT126WDT-C65

L/N: xxxxxxxxxx

QTY: xxxx pcs

DATA: xxxxx

P/N:	型号 Part Number
LOT No:	生产单号 Lot Number
QTY:	数量 Packing Quantity
DATA:	生产日期 Data Code
IV:	亮度 Luminous Intensity (参考 Reference)
VF:	电压 Forward Voltage (参考 Reference)

焊接 Soldering

方法 Method	焊接条件 Soldering Conditions	备注 Remark
回流焊 Reflow Soldering	240℃ for 10 sec.	-
烙铁焊 Soldering Iron	315℃ for 3sec.	使用 25W 以下功率的电烙铁 the soldering iron capacity 25W

无铅制程炉温曲线 Pb-Rree Solder Temperature Profile

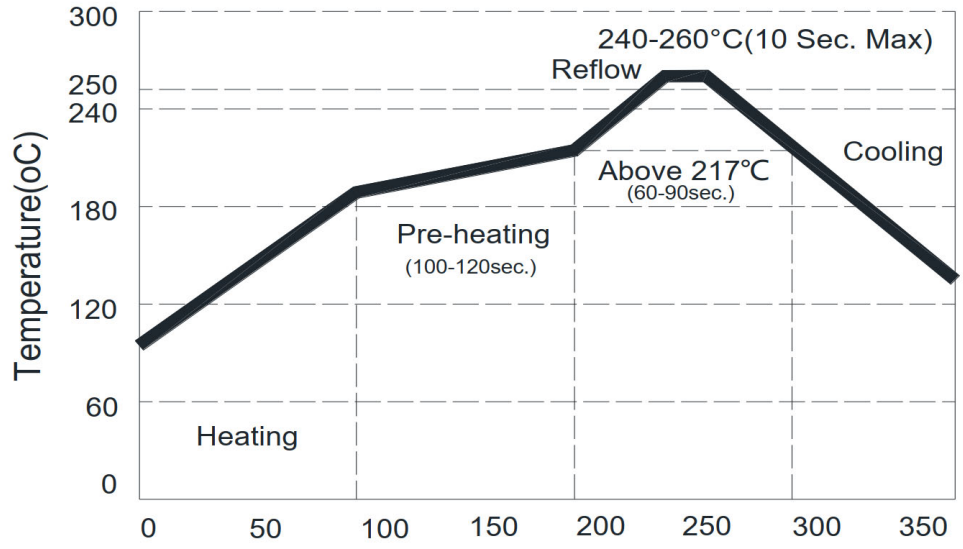

注意 Notes:

1. 过回流焊次数不可超过 2 次；Reflow soldering should not be done more than two times.
2. 焊接加热过程中不要挤压 LED；When soldering, do not put stress on the LEDs during heating.
3. 焊接完成后，不要用力弯曲线路板；After soldering, do not warp the circuit board.
4. 客户在设计使用时需串联保护电阻，避免电压波动烧毁发光二极管。Customer must apply resistors for protection; otherwise, slight voltage shift will cause big current change (Burn out will happen).

可靠性试验项目和条件 Reliability Test Items and Conditions

产品的可靠性应满足以下项目 The reliability of products shall be satisfied with items listed below.
置信水平 Confidence level：90%
批量容许次品率 LTPD：10%

编号 No.	项目 Items	测试条件 Test Condition	测试时间 Test Hours/Cycles	样品数量 Sample Size	判定标准 Ac/Re
1	回流焊 Reflow Soldering	240+/-5℃/10sec.	3 Cycles	22pcs	0/1
2	热冲击 Thermal Shock	H : +150℃ 5min ∫ 10 sec L : -65℃ 5min	300 Cycles	22pcs	0/1
3	温度循环 Temperature Cycle	H : +100℃ 15min ∫ 5 min L : -40℃ 15min	300 Cycles	22pcs	0/1
4	高温高湿测试 High Temperature/Humidity Reverse Bias	Ta=85℃,85%RH	1000 Hrs.	22pcs	0/1
5	低温贮藏 Low Temperature Storage	Ta= - 40℃	1000 Hrs.	22pcs	0/1
6	高温贮藏 High Temperature Storage	Ta=100℃	1000 Hrs.	22pcs	0/1
7	寿命测试 DC Operation Life	Ta=25℃	1000 Hrs.	22pcs	0/1
8	红墨水 Red ink	Red ink：alcohol=1:1 soak	24H	50pcs	0/1

包装 Packing

1.卷轴尺寸 Reel Dimensions

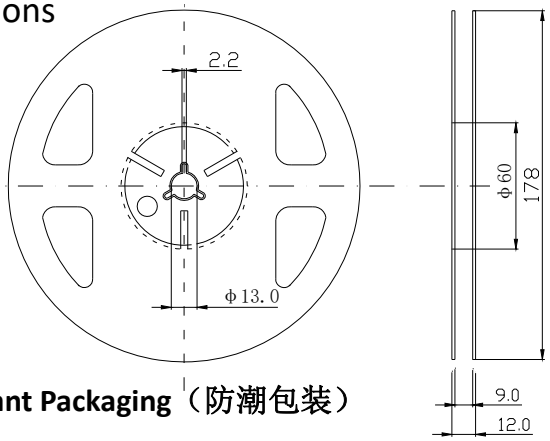

Moisture Resistant Packaging（防潮包装）

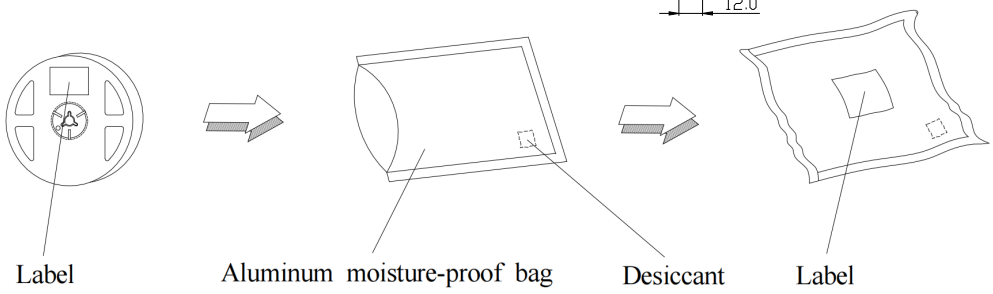

2. 载带尺寸 Carrier Tape Dimensions

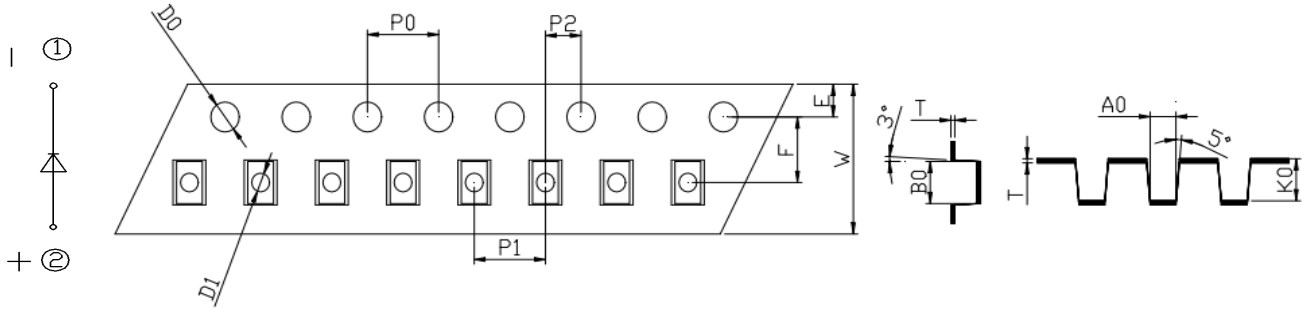

symbol	A0	B0	K0	P0	P1	P2
标准（mm）	0.43±0.05	0.86 ±0.05	0.43 ±0.05	4.00 ±0.10	4.00 ±0.10	2.00 ±0.05
symbol	W	T	E	F	D0	D1
标准（mm）	8.00 ±0.10	0.2 ±0.02	1.75 ±0.10	3.50 ±0.10	1.60+0.10	0.3±0.05

注意 Notes:

1. 量测公差为±0.1mm，单位是毫米。Tolerances unless mentioned ±0.1mm, Unit = mm.
2. 最小包装数量为每卷 5000 pcs。Minimum packing amount is 5000 pcs per reel.

储藏 Storage

1. 发光二极管在出厂后可在温度 30 度以下，湿度 60％以下的环境内保存 1 年。The LED should be stored at 30℃ or less and 60% RH or less after being shipped from MH and the storage life limits are 1 year.

2. 在产品准备使用前请不要打开防潮袋。Do not open moisture proof bag before the products are ready to use.

3. 打开包装后：产品暴露在温度 30 度以下湿度 60％以下的 3 个月内用完，若仍然有剩余，请一定要放到防潮柜内储存。After opening the package: The LED's floor life is 3 months under 30℃ or less and 60% RH or less. If unused LEDs remain, it should be stored in moisture proof packages.

4. 如果吸湿性材料（硅胶）已用完或发光二极管已超过存储时间，应使用以下条件进行烘烤处理，处理：60±5℃烘烤 5 小时。If the moisture absorbent material (silica gel) has faded away or the LEDs have exceeded the storage time, baking treatment should be performed using the following conditions. Baking treatment: 60±5℃ for 5 hours.

3. 请避免保存在温度变化明显，尤其是高湿度的地方 Please avoid rapid transitions in ambient temperature, especially, in high humidity environments where condensation can occur.

使用注意事项 Application Restrictions

1. 生产环境：建议在 20℃ ~30℃ & 30%~60%RH 下作业。
Production environment: it is recommended to operate at 20 DEG ~30 DEG &30%~60%RH.

2. 维修温度建议控制在 280℃ 以下，持续加热时间不超过 30S。
The service temperature shall be controlled below 280 degrees, and the continuous heating time shall not exceed 30S.

3. 维修时避免尖锐物体直接戳到胶体，取料时建议夹取板材两端。
When repairing, the sharp object should be directly punched into the colloid, and when picking the material, it is recommended to clamp both ends of the PCB.

其他注意事项 Other Restrictions

1. 本文档中所描述的规范，上述规格可变更不通知。美华将对上述规格的材料更改的保留权。
Specification described in this document，Above specification may be changed without notice. MEIHUA will reserve authority on material change for above specification.

2. 使用本产品时请遵守规格书绝对最大额定值。否则美华将不承担因此引起的损失。
When using this product, please observe the absolute maximum ratings and the instructions for using outlined in these specification sheets. MEIHUA assumes no responsibility for any damage resulting from use of the product which does not comply with the absolute maximum ratings and the instructions included in these specification sheets.

3. 这些数据包括美华版权保护的材料，未经授权请不要复制。
These specification sheets include materials protected under copyright of MEIHUA Corporation. Please don't reproduce or cause anyone to reproduce them without MEIHUA's consent.

4. 静电放电（静电放电）ESD (Electrostatic Discharge)
产品敏感的静电或冲击电压。当使用产品时静电放电会损坏模具及其可靠性。对静电放电的措施强烈推荐消除电荷接地的手环，防静电鞋，衣服和地板等。The products are sensitive to static electricity or surge voltage. ESD can damage a die and its reliability. When handling the products, the following measures against electrostatic discharge are strongly recommended: Eliminating the charge Grounded wrist strap, ESD footwear, clothes, and floors.

5. 发光二极管正向电流方向使用，驱动电路的设计必须使 LED 在关闭的状态下不经受正向或逆向电压，如果反向电压不断应用于发光二极管，它可以导致 LED 损坏。
The LEDs should be operated with forward bias. The driving circuit must be designed so that the LEDs are not subjected to forward or reverse voltage while it is off. If reverse voltage is continuously applied to the LEDs, it may cause migration resulting in LED damage.

规格书更改履历
The Revision Curriculum

版本号 Rev.No.	更改内容 Revision Content	时间 Revision Date	更改人 Engineer
V1	规格书新版本	2025-04-25	Leo
V2	MHT126WDT-C2 改为 MHT126WDT-C65	2026-04-11	Leo