Operation:DIP/立式　小型 3PIN 二挡位　滑动开关　[柄长可定制]

RoHS Compliant

LTEM NO.: MS-205-G3　(Series)

(L9.10mm×W3.5mm×H3.50mm　SLIDE-SWITCH)

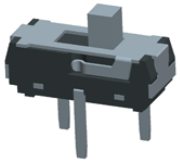

邀您使用(微信)小程序
硕方电子开关&连接器选型手册
手机扫码即可进入...

表面插装 DIP
侧向操作 LATERAL
精密部品 NICETY
可靠 STABILIZE
適合環保 RoHS

Material declaration

No.	NAME	Description
1	拨柄	PA46 耐热尼龙塑料
2	盖板	C5191R-H 磷铜[镀银]
3	基座	LCP 30%G/F (Black)耐热塑胶
4	弹片	Beryllium bronze 铍青铜[单面镀银]
5	嵌件	C5191R-H 磷铜[镀银]

Technical parameter

PROJECT \ LEVEL		A[better product]	B[average product]
Electrical Properties	Contact Rating	0.3A, 30V DC	
	Initial Contact Resistance	50mΩ max.	
	Insulation Resistance	100MΩ min.500V DC　Skey/PD：100MΩ min.300V DC	
	Withstand Voltage	300V AC for 1 minute	250 V AC for 1 minut
Durable Performance	There No Load	15,000 Cycles	10,000 Cycles
	Rated Load	12,000 Cycles	8,500 Cycles
Sterage temp.		-25℃～+75℃(Operating Temp:)	
Operating Force		2.6N.（1N.=100gram-force） ±0.5N	
Heat Rrsistance		IR Reflow:255℃,5sec.　Manual:350℃,3sec.	

CIRCUIT DIAGRAM

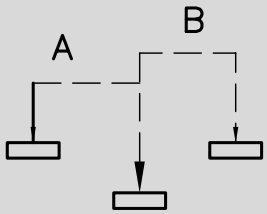

Unit:mm

DECIMALS	ANGLES
.X :±0.25	X.° :±1.5°
.XX :±0.15	X.X° :±1.0°
.XXX :±0.10	.XXX° :±0.5°

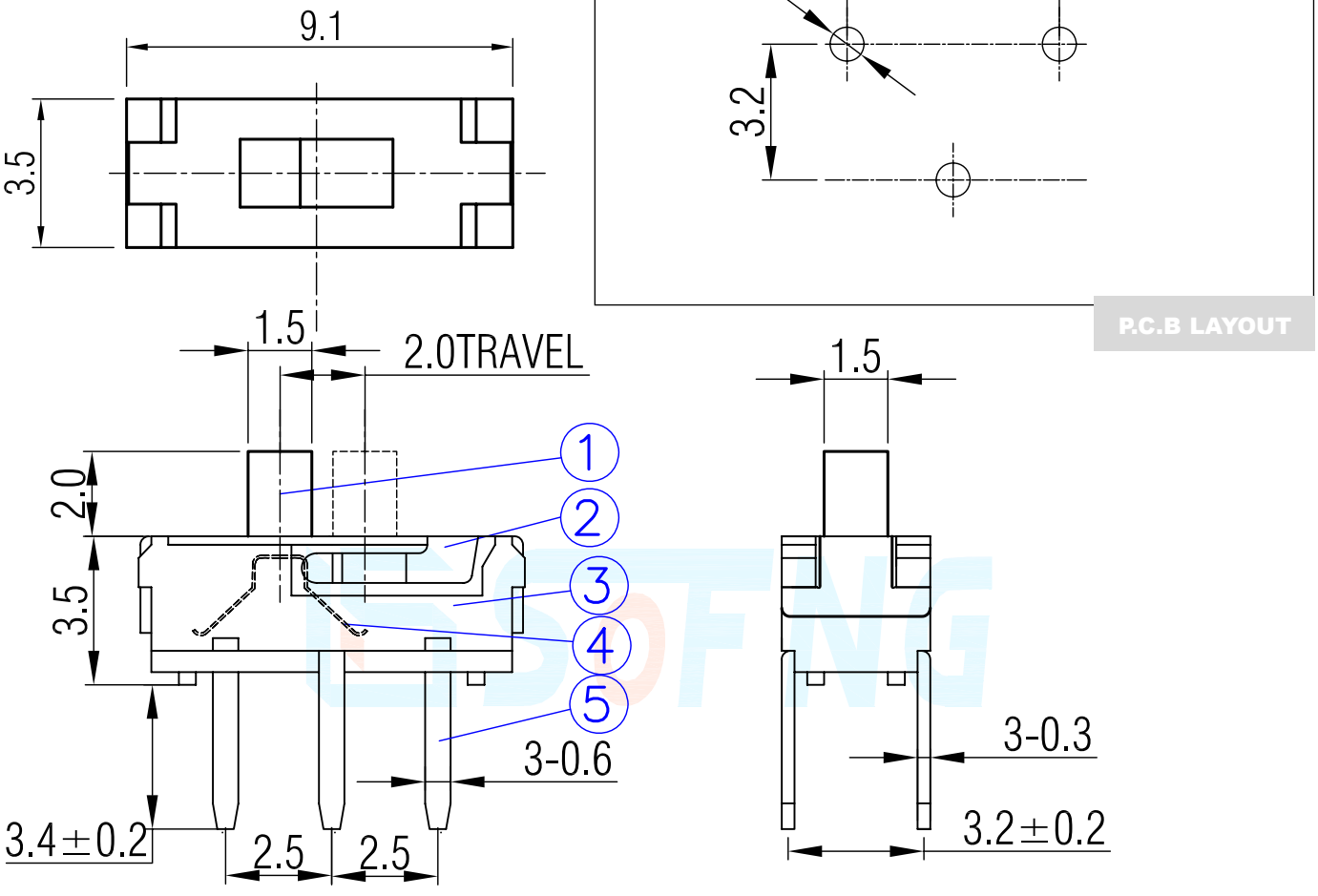

P.C.B LAYOUT