CONNECTORS

硕方精密连接器 www.Sofng.com

Operation: Micro-HDMI Connectors/HDMI(D Type)贴片卧式 HDMI 连接器

Halogen Free | LEAD FREE | RoHS Compliant

ITEM NO.: HDMI-219B SMT+D 卧式

(L7.55×W6.50×H2.90mm -MICRO HDMI SMT)

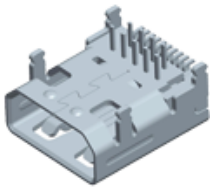

邀您使用(微信)小程序
硕方电子开关&连接器选型手册
手机扫码即可进入...

gh Definition Multimedia Interface

表面贴装 SMT+DIP

侧向操作

精密部品 NICETY

可靠 STABILIZE

適合環保 RoHS

Material declaration

No	NAME	Description
①	HOUSING	LCP 耐热塑胶[Black]
②	SHELL	黄铜 C2680/SPCC[镀镍 100u" min]t=0.30
③	CONTACT3	磷铜 C5191(镀金 1u" /锡基 50u)t=0.15
④	CONTACT4	磷铜 C5191(镀金 1u" /锡基 50u)t=0.15

Technical parameter

PROJECT \ LEVEL		A[better product]	B[average product]
Electrical Properties	Contact Rating	0.25A, 12V DC	
	Initial Contact Resistance	50mΩ max.	
	Insulation Resistance	100MΩ min.500V DC	Skey/PD：100MΩ min.300V DC
	Withstand Voltage	500V AC for 1 minute	350 V AC for 1 minut
Durable Performance	There No Load	6,000 Cycles	5,000 Cycles
	Rated Load	5,000 Cycles	4,000 Cycles
Sterage temp.		-35℃～+75℃(Operating Temp:)	
Operating Force		IF:35N MAX.(EF:10.0N MIN.)	
Heat Rrsistance		IR Reflow:255℃,5sec. Manual:350℃,3sec.	

SIGNAL

Pin No.	D Type(MICRO HDMI)
1	Hot Plug Detect
2	Utility
3	TMDS Data 2+
4	TMDS Data 2 Shield
5	TMDS Data 2-
6	TMDS Data 1+
7	TMDS Data 1 Shield
8	TMDS Data 1-
9	TMDS Data 0+
10	TMDS Data 0 Shield
11	TMDS Data 0-
12	TMDS Clock+
13	TMDS Clock Shield
14	TMDS Clock-
15	CEC
16	DDC/CEC Ground
17	SCL
18	SDA
19	+5V Power

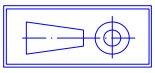

Unit:mm

DECIMALS	ANGLES
.X :±0.25	X.° :±1.5°
.XX :±0.15	X.X° :±1.0°
.XXX :±0.10	.XXX° :±0.5°

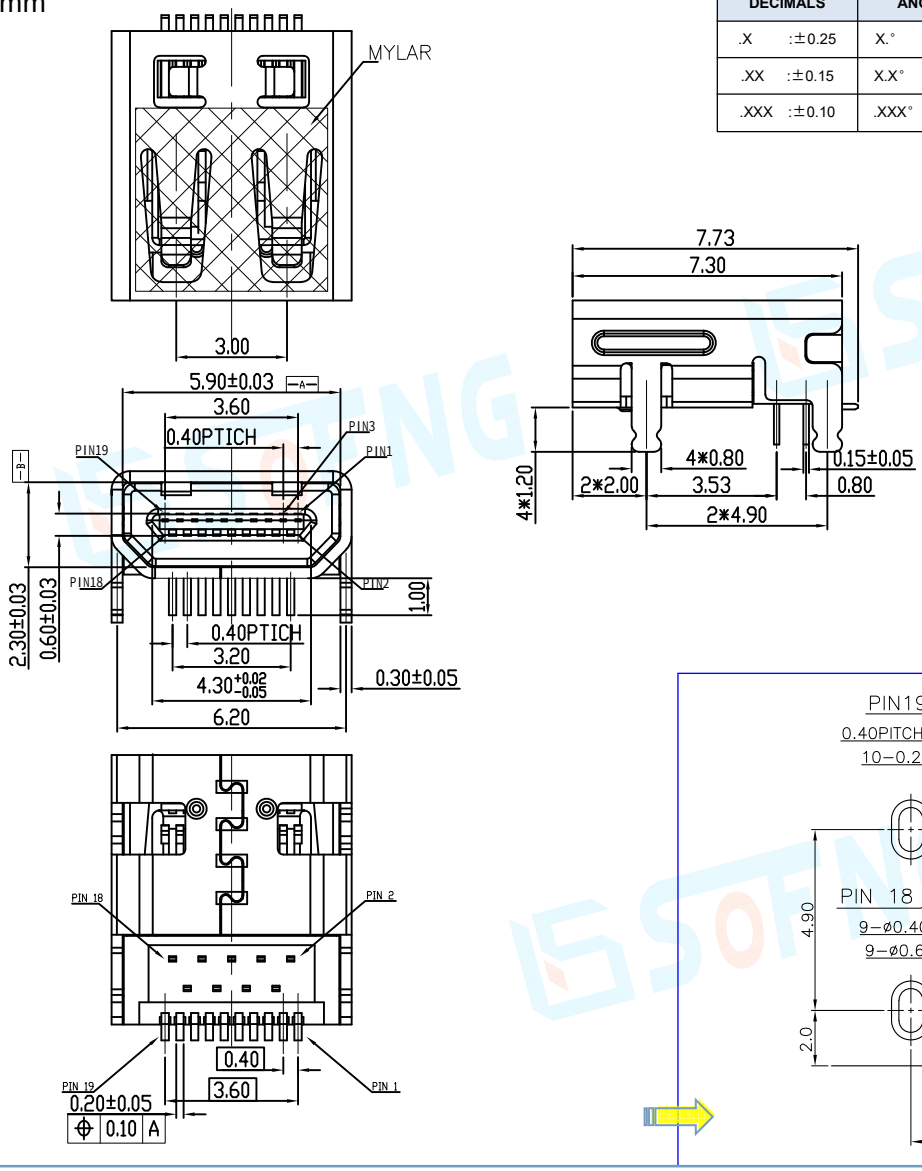

P.C.B LAYOUT

