CONNECTORS

Operation: SMT 侧立式 / DIP 外壳&大电流 2.0Type-C 连接器



LTEM NO.:MC-324S

(L14.0-W4.3-H11.2mm Type-C CONNECTORS)

Universal Serial Bus Connectors

表面侧贴 SMT

侧向導入 LATERAL

精密部品 NICETY

可靠 STABILIZE

適合環保 RoHS

Technical parameter

PROJECT \ LEVEL		A[better product]	B[average product]
Electrical Properties	Contact Rating	5.0A, 20V DC	
	Initial Contact Resistance	30mΩ max.	50mΩ max.
	Insulation Resistance	100MΩ min.500V DC	Skey/PD：100MΩ min.300V DC
	Withstand Voltage	500V AC for 1 minute	350 V AC for 1 minut
Durable Performance	There No Load	10,000 Cycles	8,000 Cycles
	Rated Load	8,500 Cycles	6,500 Cycles
Sterage temp.		-30℃～+75℃(Operating Temp:)	

Unit:mm

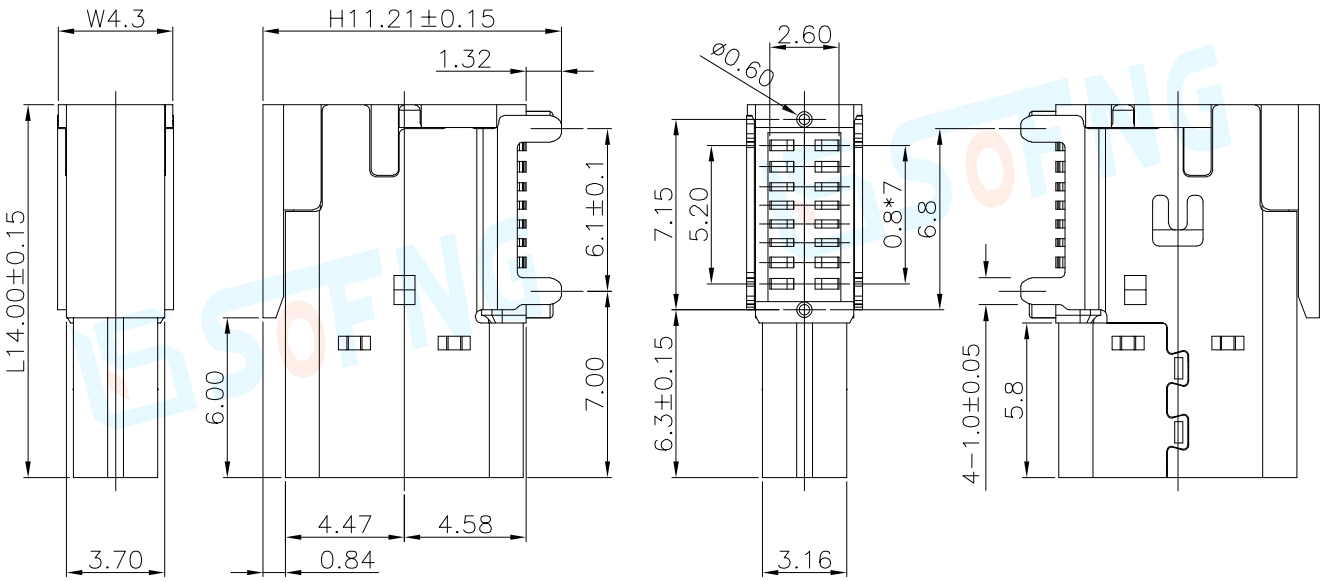

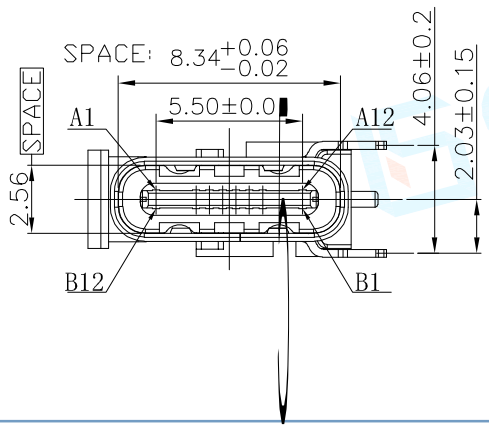

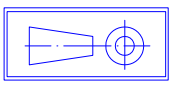

Material declaration			
No.	NAME	Type	Description
①	SHELL	1	Stainless Steel,(Gold Flash)
②	HOUSING	1	THERMOPLASTIC(glass fiber filled)BK
③	CONTACT	16	BRASS(t=0.12mm)
④	METAL COVER	1	STAINLESS STEEL(t=0.30mm)
⑤	LOCK PIN	2	STAINLESS STEEL(t=0.20mm)

CIRCUIT BOARD SIZE

(Vertical view)

Operating Force	Inward	10.0～15.0N.(1N.=100gram-force)	**Solder-ability (Max.)**
	Exiting	7.0～12.0N.(1N.=100gram-force)	IR Reflow:255℃,5sec. Manual:350℃,3sec.

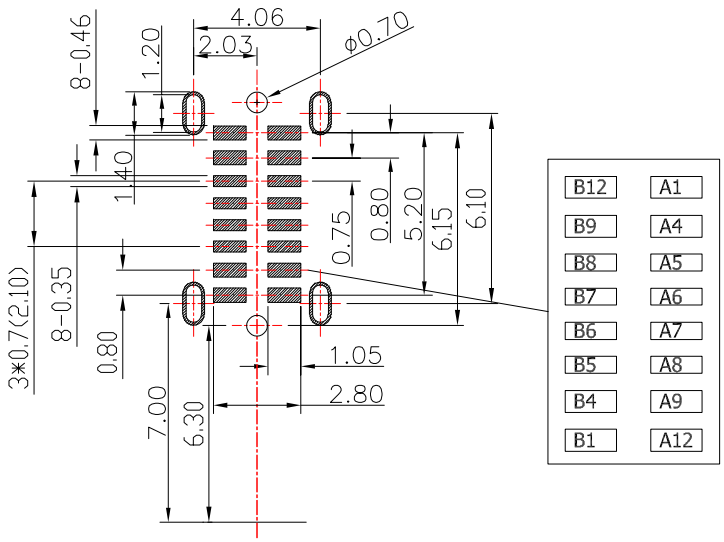

RECOMMENDED PCB LAYOUT
TOLERANCE ±0.05

PIN ASSIGNMENTS

PIN	Signal NAME		PIN	Signal NAME
A 1	GND		B12	GND
A 4	V BUS		B 9	V BUS
A 5	CC1		B 7	Dn2
A 6	Dp1		B 6	Dp2
A 7	Dn1		B 5	CC2
A 9	V BUS		B 4	V BUS
A12	GND		B 1	GND

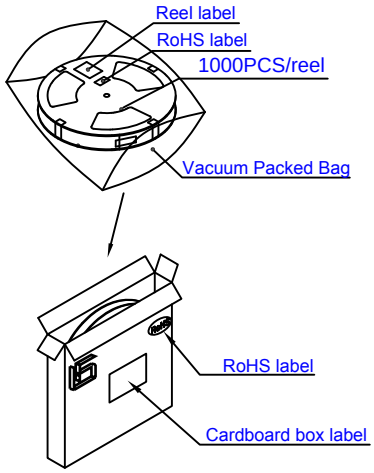

邀您使用(微信)小程序
硕方电子开关&连接器选型手册
手机扫码即可进入...

本品不屬於危害性廢棄物,須丟棄時可以委託回收商予以回收再生處理。
Products do not belong to ·

運送時本產品不要直接與水、酸鹼性化學物質接觸,或放置於含有以上氣體環境中,並且需要注意會有滑落、側翻的危險發生；運輸過程中不能有碰撞或者擠壓,須保證溫度與濕度適中[常溫 25℃,濕度在 50℃以內],不可導致材料變形或氧化。

注記 NOTICE

1. 碩方公司擁有最終解釋權；The SOFNG company reserves the right of final interpretation；
2. 文件禁止外洩、轉載；Leaked and reproduced prohibited；
3. 未經授權修改無效。Modify is invalid.