Operation:HDMI Connectors/(A Type)反向卧贴式 HDMI 连接器

Halogen Free | LEAD FREE | RoHS Compliant

ITEM NO.:HDMI-019W

(L10.0×W15.0×H6.6mm HDMI DIP)

High Definition Multimedia Interface

表面贴装 SMT
侧向操作 LATERAL
精密部品 NICETY
可靠 STABILIZE
適合環保 RoHS



Material declaration

No	NAME	Description
①	HOUSING	LCP 耐热塑胶[Black]
②	SHELL	黄铜 C2680/SPCC[镀镍 100u" min]t=0.30
③	CONTACT3	磷铜 C5191(镀金 1u" /锡基 50u)t=0.15
④	CONTACT4	磷铜 C5191(镀金 1u" /锡基 50u)t=0.15

Technical parameter

PROJECT \ LEVEL		A[better product]	B[average product]
Electrical Properties	Contact Rating	0.25A, 12V DC	
	Initial Contact Resistance	50mΩ max.	
	Insulation Resistance	100MΩ min.500V DC Skey/PD：100MΩ min.300V DC	
	Withstand Voltage	500V AC for 1 minute	350 V AC for 1 minut
Durable Performance	There No Load	6,000 Cycles	5,000 Cycles
	Rated Load	5,000 Cycles	4,000 Cycles
Sterage temp.		-35℃～+75℃(Operating Temp:)	
Operating Force		IF:35N MAX.(EF:10.0N MIN.)	
Heat Rrsistance		IR Reflow:255℃,5sec. Manual:350℃,3sec.	

SIGNAL

Pin No.	A Type(HDMI)
1	TMDS Data 2+
2	TMDS Data 2 Shield
3	TMDS Data 2-
4	TMDS Data 1+
5	TMDS Data 1 Shield
6	TMDS Data 1-
7	TMDS Data 0+
8	TMDS Data 0 Shield
9	TMDS Data 0-
10	TMDS Clock+
11	TMDS Clock Shield
12	TMDS Clock-
13	CEC
14	Reserved (N.C.)
15	SCL
16	SDA
17	DDC/CEC Ground
18	+5V Power
19	Hot Plug Detect

Unit:mm

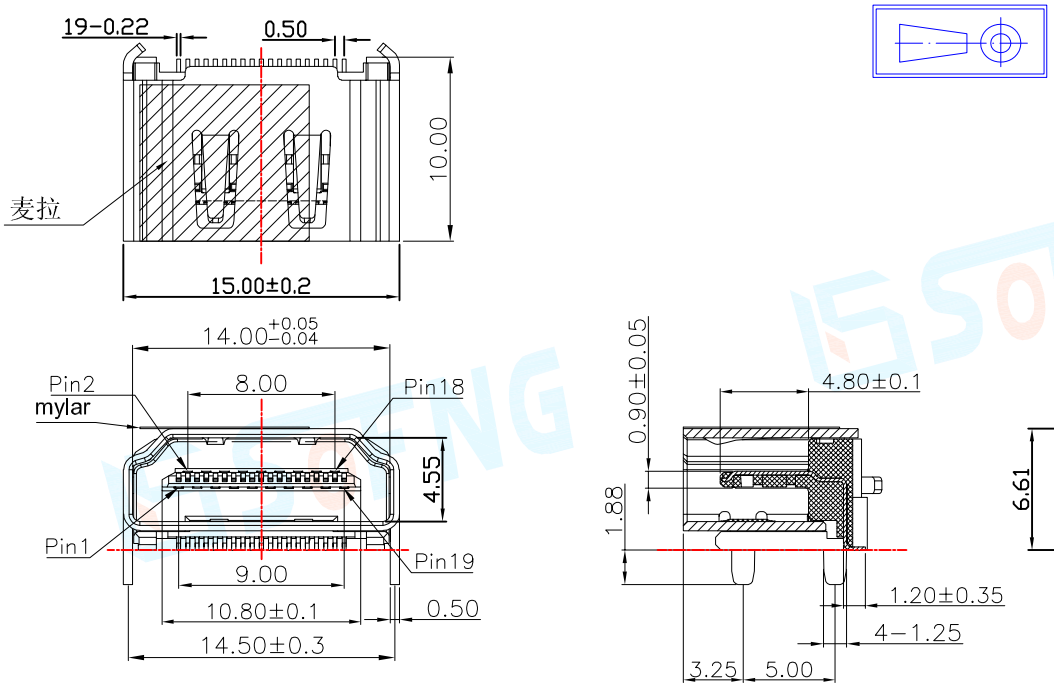

P.C.B LAYOUT

