SLIDE SWITCH

碩方精密電子開關 www.Sofng.com

Operation: SMT/贴片卧式 3PIN 小型 自复位滑动开关

Halogen Free LEAD FREE RoHS Compliant

LTEM NO.:MS-127A (Series)

(L8.8mm×W3.0mm×H2.0mm SLIDE-SWITCH)

表面贴装 SMT

侧向操作 LATERAL

精密部品 NICETY

可靠 STABILIZE

適合環保 RoHS

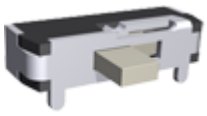

邀您使用(微信)小程序

硕方电子开关&连接器选型手册

手机扫码即可进入...

Material declaration

No.	NAME	Description
A	拨柄	PA6T (Black)耐高温尼龙
B	基座	PA6T (Black)耐高温尼龙
C	盖板	不锈钢 SUS304 t=0.4mm
D	簧片	磷铜 C5210 G/F
E	弹簧	不锈丝钢 SUS304
F	嵌件	黄铜 C2680(Qsn6.5-01 镀银) t-0.30

Technical parameter

PROJECT \ LEVEL		A[better product]	B[average product]
Electrical Properties	Contact Rating	0.3A, 30V DC	
	Initial Contact Resistance	50mΩ max.	
	Insulation Resistance	100MΩ min.500V DC Skey/PD：100MΩ min.300V DC	
	Withstand Voltage	300V AC for 1 minute	250 V AC for 1 minut
Durable Performance	There No Load	15,000 Cycles	10,000 Cycles
	Rated Load	12,000 Cycles	8,500 Cycles
Sterage temp.		-25℃～+75℃(Operating Temp:)	
Operating Force		1.8N. ±0.5N(1N.=100gram-force)	
Heat Rrsistance		IR Reflow:255℃,5sec. Manual:350℃,3sec.	

CIRCUIT DIAGRAM

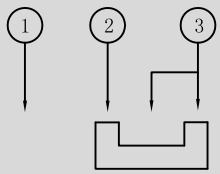

Unit:mm

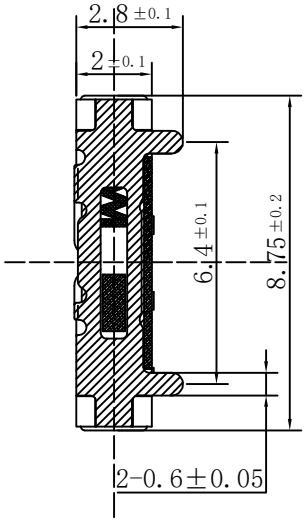

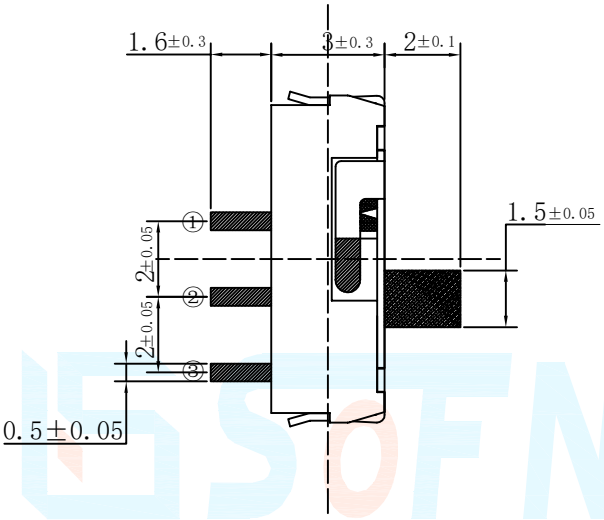

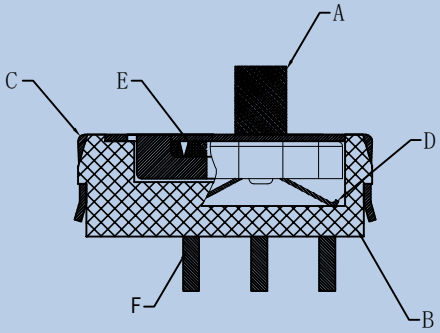

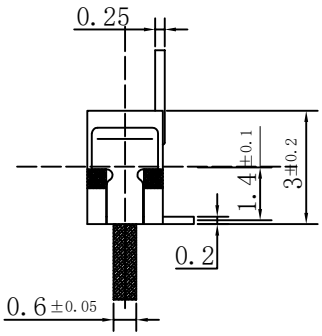

P.C.B LAYOUT

