Operation:SMT/卧贴式　小型常开单向型　检测开关[操作力可定制]

Halogen Free　LEAD FREE　RoHS Compliant

ITEM NO.:TC-624　(Series)

(L5.65mm×W4.0mm×H1.9mm　DETECTOR-SWITCH)



Material declaration

No.	NAME	Description
① A	按柄 Stem	LCP 30%(Gray)耐热塑胶 UL94V-0
② B	基座 CASE	LCP 30%(Gray)耐热塑胶 UL94V-0
③ C	外壳 Cover	H62 Y 黄铜 t=0.2mm 镀银
④ D	弹片	镀银&C5191R-H 磷青铜[镀锡]t=0.06
⑤ E	弹簧	不锈钢线 SUS304 线径 0.2mm【1.2×6.4】
⑥ G	端子 Ccontact	QSn6.5-01 (t=0.10mm)锡青铜【锡基镀银】

Technical parameter

PROJECT \ LEVEL		A[better product]	B[average product]
Electrical Properties	Contact Rating	0.1A, 12V DC	
	Initial Contact Resistance	50mΩ max.	
	Insulation Resistance	100MΩ min.500V DC　Skey/PD：100MΩ min.300V DC	
	Withstand Voltage	200V AC for 1 minute	100 V AC for 1 minut
Durable Performance	There No Load	115,000 Cycles	100,000 Cycles
	Rated Load	100,000 Cycles	850,000 Cycles
Sterage temp.		-15℃～+65℃(Operating Temp:)	
Operating Force		1.0N.(1N.=100gram-force)±0.5N	
Heat Rrsistance		IR Reflow:235℃,5sec.　Manual:350℃,3sec.	

CIRCUIT DIAGRAM

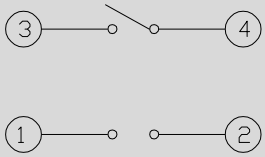

Unit:mm

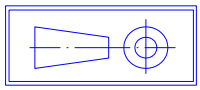

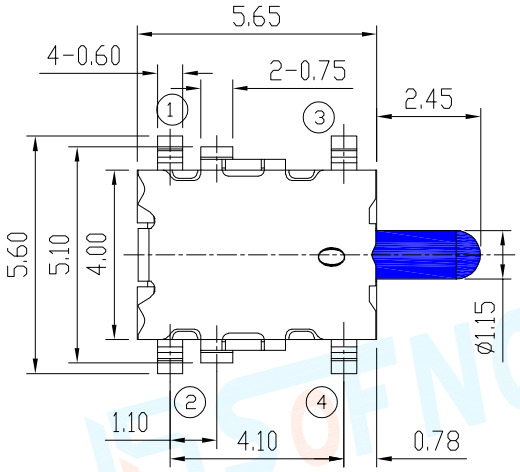

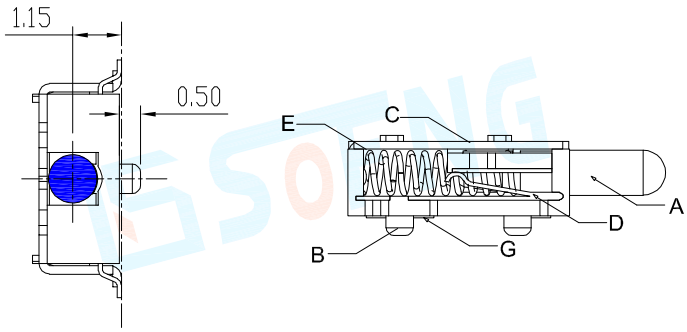

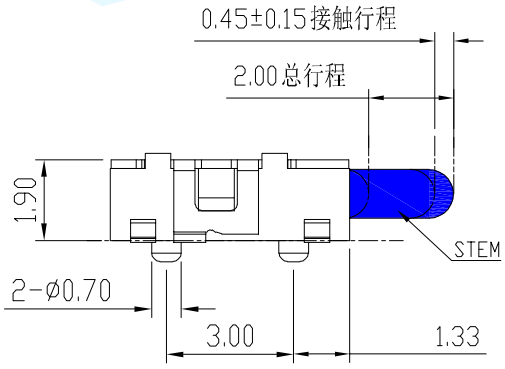

P.C.B LAYOUT

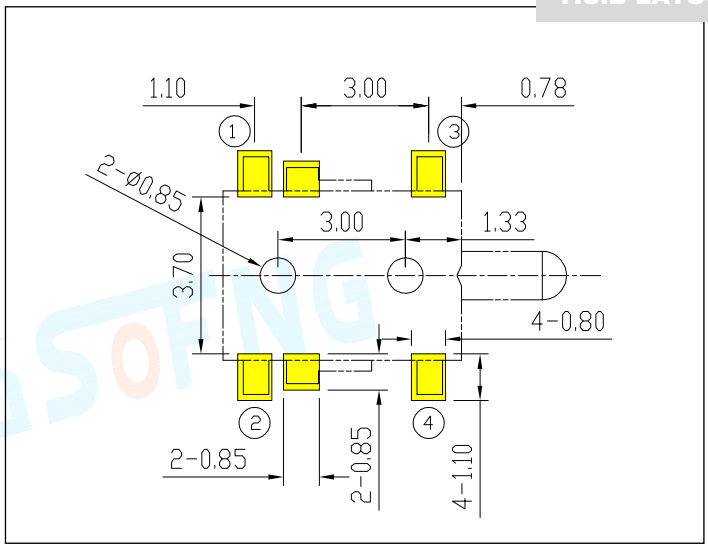

推荐锡膏厚度	0.12mm