STARWAVE
B303-30 Tian an Cyber Park ,Huangge North Road ,Longgang District ,Shen Zhen , China
TEL :+86(0)755-8327-9247 Fax :+86(0)755-8327-9247 http://www.starwavecorp.com E-mail :info@starwavecorp.com

SPECIFICATION FOR APPROVAL

CUSTOMER	:	
PRODUCT TYPE	:	SMD LVPECL CXO 2.5*2.0
NOMINAL FREQ.	:	156.25MHz
STARWAVE P/N	:	SWLEDBV33ER-156.250000
REVISION	:	A1
CUSTOMER P/N	:	
PM / SALES	:	
DATE	:	
CUSTOMER CONFIRMATION	:	(Singnature)
		(Date)

(1) Starwave requires one copy returned with signature and title of authorized individual that signifies acceptance of the attached specifications.

(2) Orders received and accepted by Starwaveafter return of signed copy of specification will be produced per these specifications.

(3) Any changes to these specifications must be agreed upon by both parties and new revision of the Product Specification Sheet will be issued.

(4) Any issuance of purchase order prior to consigning back the Approval page of "Specification Sheets" from customers will be regarded as the agreement on the contents of these specifications.

MSL:Level 1
RoHS Compliant

(for glass crystal only：Pb used in sealing glass material is exempt from EU directive)

STARWAVE
B303-30 Tian an Cyber Park ,Huangge North Road ,Longgang District ,Shen Zhen , China
TEL :+86(0)755-8327-9247 Fax :+86(0)755-8327-9247 http://www.starwavecorp.com E-mail :info@starwavecorp.com

SPECIFICATION FOR APPROVAL

PRODUCT TYPE : SMD LVPECL CXO 2.5*2.0

NOMINAL FREQ. : 156.25MHz

STARWAVE P/N : SWLEDBV33ER-156.250000

REVISION : A1

PE/RD	QA	ME
Xu wen tao		
24-Oct-26		

NOTE:

(1) The green product standard set by Starwave is based upon the international standards. Related information is publicly described on the Starwave's Website, and updated regularly. The document is compliant with the latest green product quality system directives at the time.

(2) Revision "Sx" is for engineering samples only. PE/RD's approval required.

(3) Revision "Ax" is production ready. PE, QA and MFG's approval required.

MSL:Level 1
RoHS Compliant

(for glass crystal only：Pb used in sealing glass material is exempt from EU directive)

Rev	Revise page	Revise contents	Date	Ref.No.	Reviser
S1	N/A	Initial released	24-Oct-26	N/A	Xu wen tao

■ ELECTRICAL SPECIFICATIONS

Item	Parameters	Condition	Electrical Specifications			
			MIN	TYP	MAX	UNITS
1	Nominal Frequency (Fo)		156.250000			MHz
2	Oscillation Mode		Fundamental			
3	Operating Temperature		-40	-	85	℃
4	Storage Temperature		-55	-	125	℃
5	Frequency Stability	Note 1	-20	-	20	PPM
6	Supply Voltage		2.97	3.3	3.63	V
7	Current Consumption	RL=50Ω to VDD-2V	-	-	80	mA
8	Standby Function	Internal Pull Up	YES			
9	Current Consumption(Standby)	OE=Low	-	-	10	uA
10	Output Type		LVPECL			
11	Output Load		50			Ω
12	Output Voltage High		VDD-1.025	-	VDD-0.88	V
13	Output Voltage Low		VDD-1.81	-	VDD-1.62	V
14	Rise Time	20% ~ 80% Output Swing	-	-	0.5	nS
15	Fall Time	80% ~ 20% Output Swing	-	-	0.5	nS
16	Symmetry		45	50	55	%
17	Start-up Time	To 90% of Final Amplitude	-	-	10	mS
18	Enable Voltage High (Logic 1)	Note 2	0.7VDD	-	-	V
19	Enable Voltage Low (Logic 0)	Note 2	-	-	0.3VDD	V
20	Output Enable Delay Time		-	-	2	mS
21	Output Disable Delay Time		-	-	200	nS
22	Phase Jitter	12K ~ 20MHz	-	-	60	fS rms
23	Input voltage range	Differential peak-to-peak	600	1400	2000	mV

Note 1 Inclusive of frequency tolerance at 25degC, variation over temperature, supply voltage variation, aging and vibration.

Note 2 Output will be enable if OE is Logic 1 or open ; Output will be disable if OE is Logic 0.

Note 3 The standard testing environment except temperature test is 25±5degC, 40%~70% relative humidity.

■ TESTING CIRCUIT

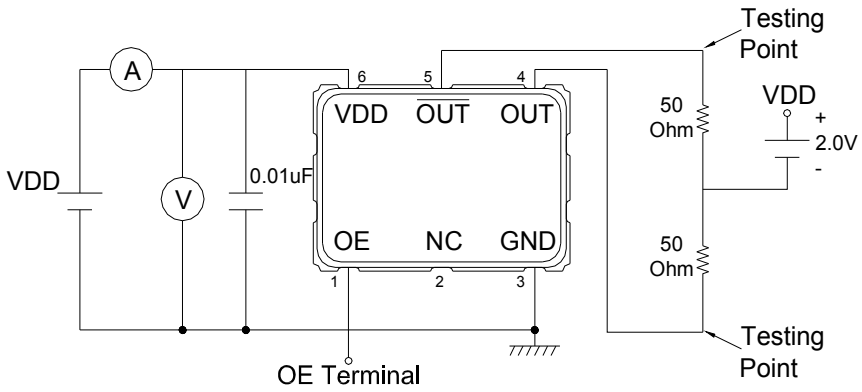

Testing Circuit Note:

1) Above testing circuits cover all the specfications except temperature test & Jitter measurement.
2) All the testing equipments are 50Ohm terminal.
3) OE terminal is open connection except OE function test.

■ WAVEFORM CONDITONS

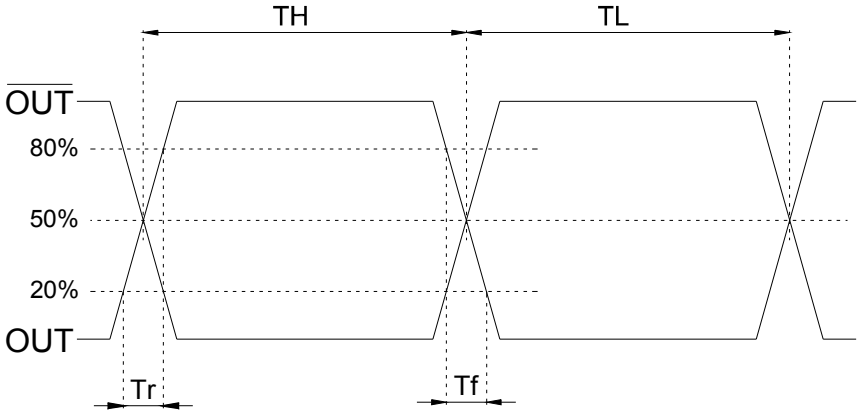

■ DIMENSIONS

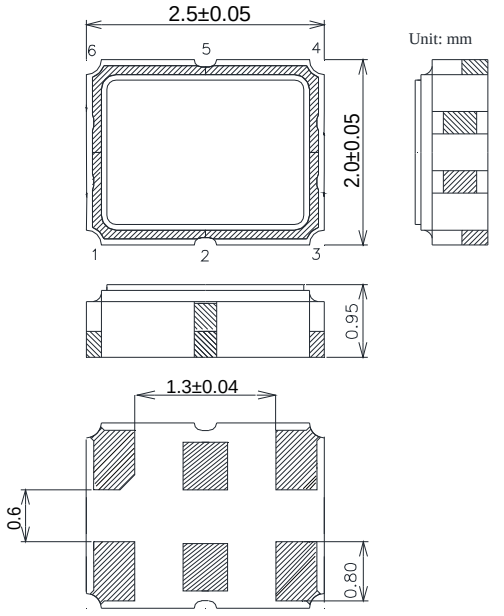

Pin Function:

1. OE
2. NC
3. GND
4. OUT
5. $\overline{OUT}$
6. VDD

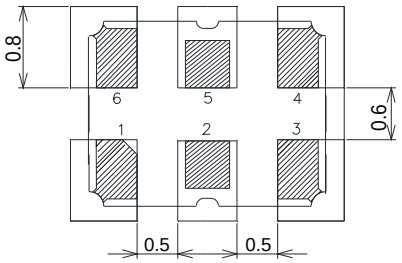

■ SUGGESTED REFLOW PROFILE

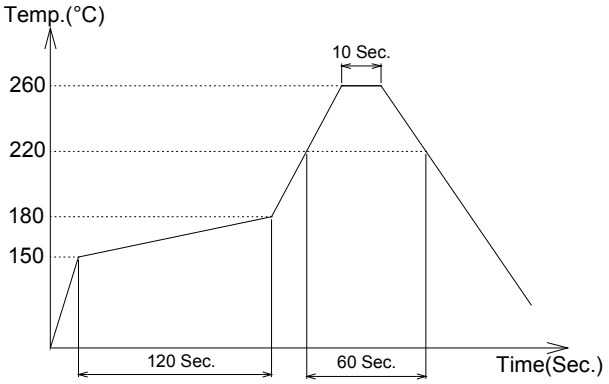

Note 1: Period while temperature exceeds the solder melting point : 220C should be less than 200 sec.

Note 2: Period while temperature stays at the top melting point : 260C should be less than 30 sec.

■ MARKING

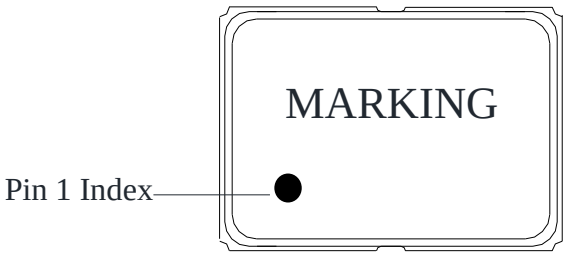

■ PACKING

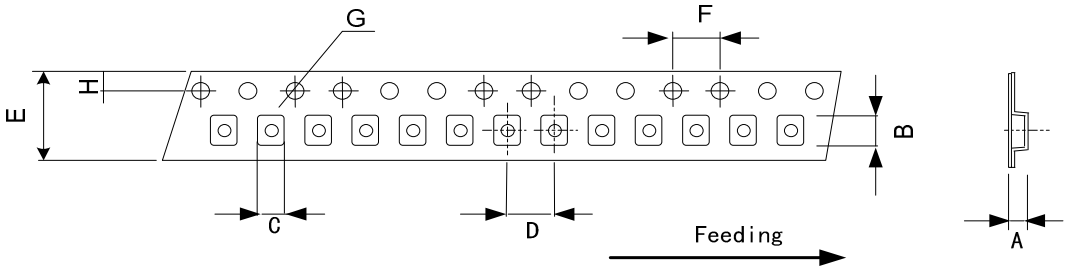

	A	B	C	D	E	F	G	H	
DIMENSIONS	1.15 ±0.05	2.70 ±0.05	2.25 ±0.05	4.00 ±0.10	8.00 ±0.20	4.00 ±0.10	1.55 ±0.05	1.75 ±0.10	(UNIT:mm)

REMARK :

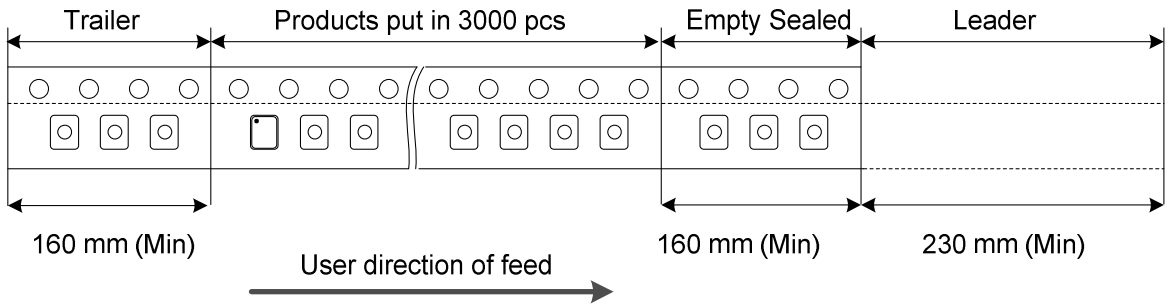

	L	L1	W	W1	
DIMENSIONS	180 0/-3	60 +1/0	11.4 ±0.1	9 ±0.3	Standard Reel Quantity is 3,000 pcs per reel (UNIT:mm)

■ STRUCTURE ILLUSTRATION

Crystal Enclosure Seal: Seam Welding
Crystal Enclosure Medium: Vacuum

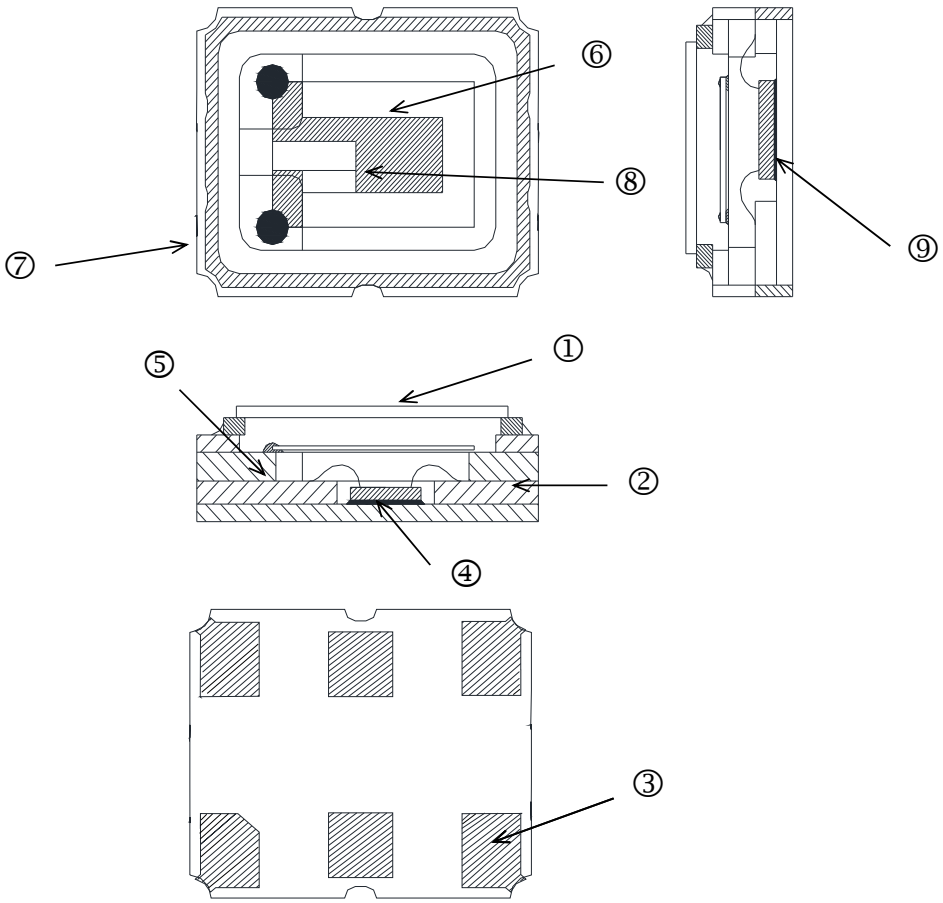

No.	COMPONENTS	MATERIALS	FINISH/SPECIFICATIONS
1	Lid	Kovar(Fe-Ni-Co)	-
2	Base(Package)	Ceramic (Al_2O_3)	-
3	Pad	Au	Tungsten Metalize + Ni Plating + Au Plating
4	IC Chip	Si	-
5	Bonding Wire	Au	-
6	Crystal Blank	SiO_2	-
7	Conductive Adhesive	Ag	Silicon Resin
8	Electrode	Noble Metal	-
9	Conductive Adhesive	Ag	Epoxy Resin

■ RELIABILITY SPECIFICATIONS

1. Mechanical Endurance

No.	Test Item	Test Methods		REF. DOC
1.1	Drop Test	75 cm height, fall freely onto concrete floor 3 times.		JIS C6701
1.2	Mechanical Shock	Device are shocked to half sine wave (1000 G) three mutually perpendicular axis each 3 times. 0.5m sec. duration time.		MIL-STD-202F
1.3	Vibration	Frequency range Amplitude Sweep time Perpendicular axis each test	10 ~ 2000 Hz 1.52 mm 20 minutes 4 hours (Total test time 12 hrs)	MIL-STD-883E
1.4	Gross Leak	Standard Sample For Automatic Gross Leak Detector. Test Pressure: 2Kg / cm^2		MIL-STD-883E
1.5	Fine Leak	Pre-condition - Helium Bombing 4.5 Kgf / cm^2 for 2 hrs Tested by mass-spectrumeter		MIL-STD-883E
1.6	Solderability	Temperature Immersing depth Immersion time Flux	245 °C ± 5°C 0.5 mm minimum 5 ± 1 seconds Rosin resin methyl alcohol solvent (1 : 4)	MIL-STD-883E

2. Environmental Endurance

No.	Test Item	Test Methods		REF. DOC
2.1	Resistance to Soldering Heat	Pre-heat temperature Pre-heat time Test temperature Test time	125 °C 60 ~ 120 sec. 260 ± 5 °C 10 ± 1 sec.	MIL-STD-202F
2.2	High Temp. Storage	+125 °C ± 3 °C for 1000 hours		MIL-STD-883E
2.3	Low Temp. Storage	-40 °C ± 3 °C for 1000 hours		
2.4	Thermal Shock (Air to Air)	Total 100 cycles of the following temperature cycle 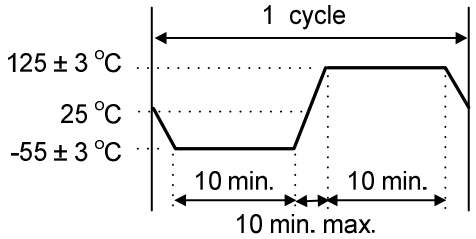		MIL-STD-883E
2.5	Pressure Cooker Test	120 ± 3°C, RH100%, 2 bar, for 240 hours		EIA-JESED22
2.6	High Temp＆Humidity	85°C ± 3°C, RH 85% , 1000 hours		EIA-JESED22
2.7	Aging	85°C ± 3°C, Voltage input by specification, 1000 Hrs		EIA-JESED22