STARWAVE

B303-30 Tian an Cyber Park ,Huangge North Road ,Longgang District ,Shen Zhen , China

TEL :+86(0)755-8327-9247 Fax :+86(0)755-8327-9247 http://www.starwavecorp.com E-mail :info@starwavecorp.com

SPECIFICATION FOR APPROVAL

CUSTOMER	:	
PRODUCT TYPE	:	SMD GLASS XTAL 5.0*3.2
NOMINAL FREQ.	:	10MHz
STARWAVE P/N	:	SWXHBAHXH0-10.000000
REVISION	:	A1
CUSTOMER P/N	:	
PM / SALES	:	
DATE	:	

CUSTOMER SIGNATURE & Date

(1) STAR requires one copy returned with signature and title of authorized individual that signifies acceptance of the attached specifications.

(2) Orders received and accepted by STAR after return of signed copy of specification will be produced per these specifications.

(3) Any changes to these specifications must be agreed upon by both parties and new revision of the Product Specification Sheet will be issued.

(4) Any issuance of purchase order prior to consigning back the Approval page of "Specification Sheets" from customers will be regarded as the agreement on the contents of these specifications.

RoHS Compliant

STARWAVE
B303-30 Tian an Cyber Park ,Huangge North Road ,Longgang District ,Shen Zhen , China
TEL :+86(0)755-8327-9247 Fax :+86(0)755-8327-9247 http://www.starwavecorp.com E-mail :info@starwavecorp.com

PRODUCT SPECIFICATION SHEET

PRODUCT TYPE	:	SMD GLASS XTAL 5.0*3.2
NOMINAL FREQ.	:	10MHz
STARWAVE P/N	:	SWXHBAHXH0-10.000000
REVISION	:	A1

PE/RD	QA	MFG
Zhang fen qi	*Xu wen tao*	*Luo jun jie*
24-Oct-26	*24-Oct-26*	*24-Oct-26*

NOTE:

(1)Lead Free Products are "Directive 2002/95/EC of The European Parliament of 27 January 2003 on the restriction of the use of certain hazardous substances (RoHS) in electrical and electronic equipment" Compliant (Attachment: SGS Test Report).

(2)Revision "Sx" is for engineering samples only. PE/RD's approval required.

(3)Revision "Ax" is production ready. PE, QA and MFG's approval required

RoHS Compliant

Rev	Revise page	Revise contents	Date	Ref.No.	Reviser
A1	N/A	Initial released	24-Oct-26	N/A	Xu wen tao

■ ELECTRICAL SPECIFICATIONS

Standard atmospheric conditions

Unless otherwise specified, the standard range of atmospheric conditions for making measurement and tests are as follow:

Ambient temperature : 25±5℃

Relative humidity : 40%~70%

If there is any doubt about the results, measurement shall be made within the following limits:

Ambient temperature : 25±3℃

Relative humidity : 40%~70%

Measure equipment

Electrical characteristics measured by HP E5100A or equivalent.

Crystal cutting type

The crystal is using AT CUT (thickness shear mode).

Unit Weight:

0.046±0.001 g/pcs

	Parameters	SYM.	Electrical Spec.				Notes
			MIN	TYPE	MAX	UNITS	
1	Nominal Frequency	FL		10.000000		MHz	-
2	Oscillation Mode	-		Fundamental		-	-
3	Load Capacitance	CL		12		pF	-
4	Frequency Tolerance	-		±10		ppm	at 25 ℃ ± 3 ℃
5	Frequency Tolerance	-		±80		ppm	Over Operating Temp. Range (Reference 25℃)
6	Operating Temperature	-	-40	~	125	℃	-
7	Aging	-		±3		ppm	1st Year
8	Drive Level	DL	-	10	-	uW	-
9	Effective Resistance Rr	Rr	-	-	80	Ω	-
10	Shunt Capacitance C0	C0	-	-	2	pF	-
11	Insulation Resistance	-	500	-	-	MΩ	at DC 100V
12	Storage Temperature Range	-	-40	~	105	℃	-

■ DIMENSIONS

(Unit:mm)

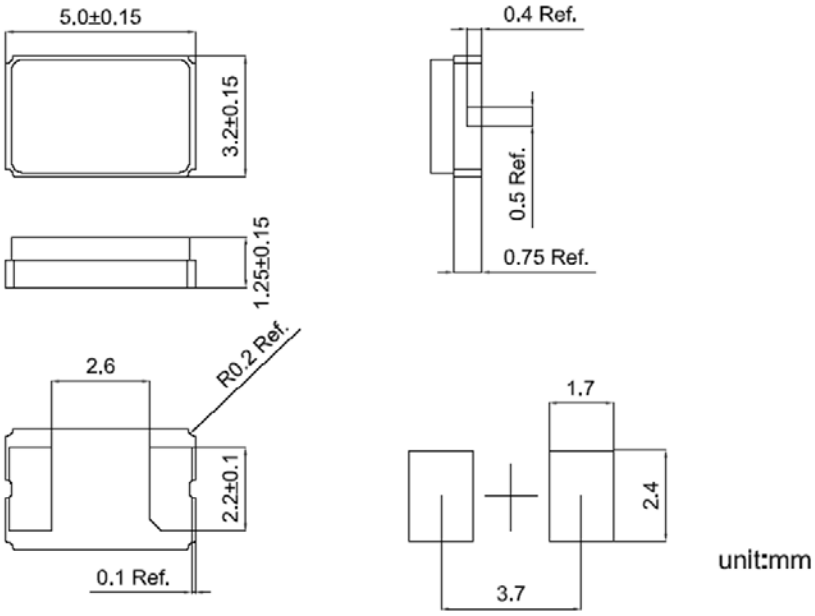

*Coplanarity of solderable areas Camber 0.10 mm Max

■ MARKING



■ SUGGESTED REFLOW PROFILE

Total time : 200 sec. Max.

Solder melting point :220 ℃

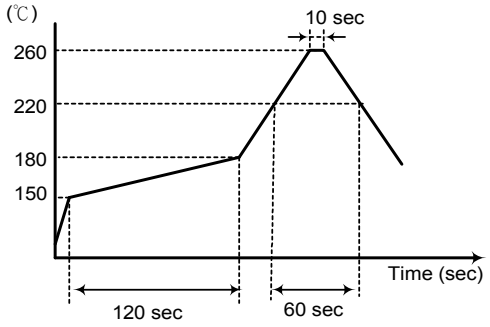

■ STRUCTURE ILLUSTRATION

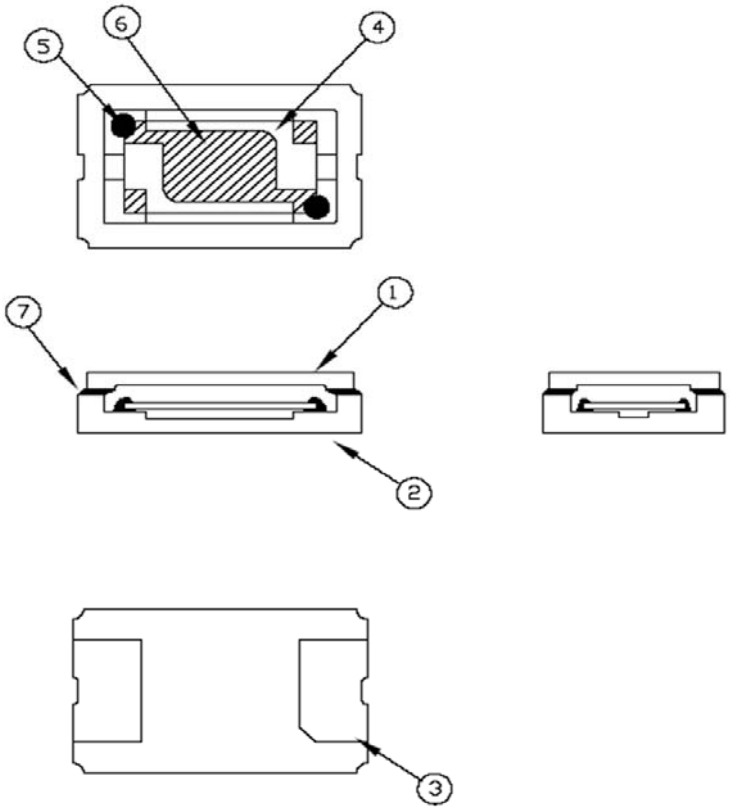

NO	COMPONENTS	MATERIALS	FINISH/SPECIFICATIONS
1	Cap	Ceramic (Al_2O_3)	-
2	Base(Package)	Ceramic (Al_2O_3)	-
3	PAD	Au	Tungsten metalize + Ni plating + Au plating
4	Crystal blank	SiO_2	-
5	Conductive adhesive	Resin+Ag	-
6	Electrode	Ag	-
7	Sealing Glass	Glass(PbO)	-

■ **PACKING : (EIA-481-2)**

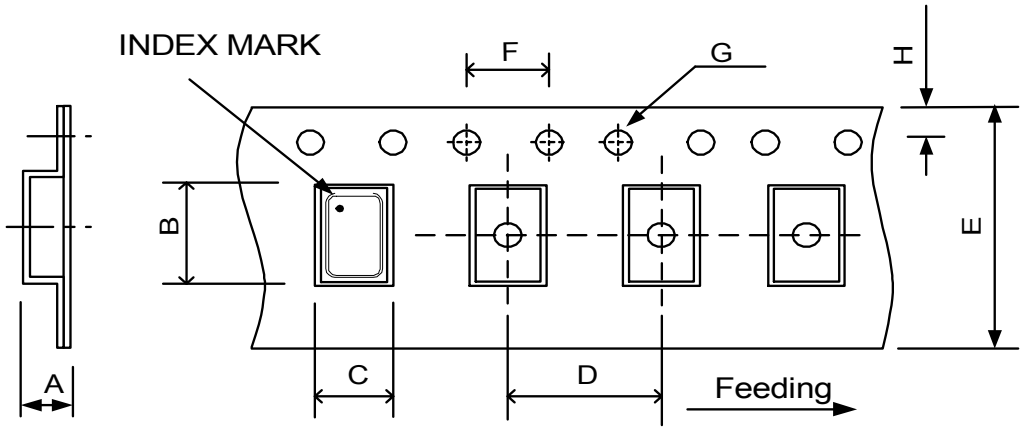

DIMENSIONS	A	B	C	D	E	F	G	H	
	1.40	5.40	3.60	8.00	12.00	4.00	1.55	1.75	(UNIT : mm)

REMARK :

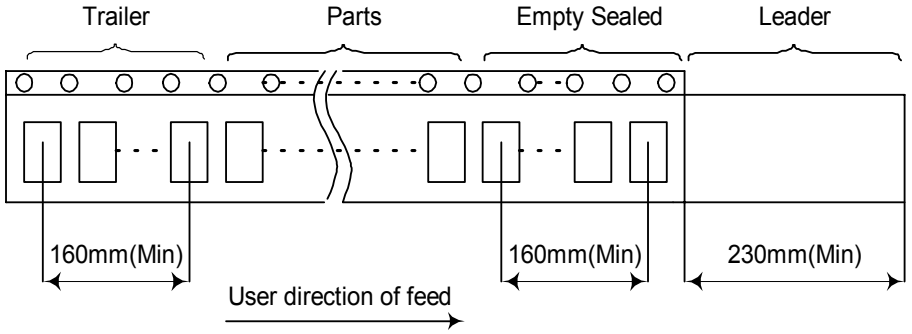

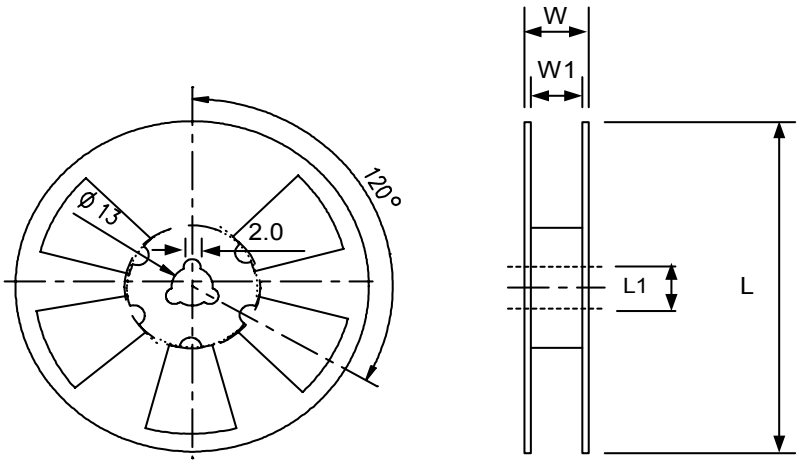

DIMENSIONS	L	L1	W	W1	pcs / Reel (UNIT : mm)
	180	13	16.5	12	Standard Reel Quantity is 1,000 pcs per reel

■ RELIABILITY SPECIFICATIONS

1.Mechanical Endurance

No.	Test Item	Test Methods		REF.DOC
1.1	Drop Test	75 cm height,3 times on concrete floor .		JIS C6701
1.2	Mechanical Shock	Device are shocked to half sine wave (1000 G) three mutually perpendicular axes each 3 times. 0.5m sec. duration time		MIL-STD-202F
1.3	Vibration	Frequency range Amplitude Sweep time Perpendicular axes each test time	10 ~ 2000 Hz 1.52 mm/20G 20 minute 4 hours (Total test time 12 hours)	MIL-STD-883E
1.4	Gross Leak	Standard Sample For Automatic Gross Leak Detector, Test Pressure: 2Kg / cm^2		MIL-STD-883E
1.5	Fine Leak	Helium Bombing 4.5 Kgf / cm^2 for 2 hr		
1.6	Solderability	Temperature Immersing depth Immersion time Flux	260 ℃ ± 5℃ 0.5 mm minimum 5 ± 1 seconds Rosin resin methyl alcohol solvent (1 : 4)	MIL-STD-883E

2.Environmental Endurance

No.	Test Item	Test Methods		REF. DOC
2.1	Resistance To Soldering Heat	Pre-heat temperature Pre-heat time Test temperature Test time	125 ℃ 60 ~ 120 sec. 260 ± 5 ℃ 10 ± 1 sec.	MIL-STD-202F
2.2	High Temp. Storage	+ 125 ℃ ± 3 ℃ for 1000 ± 12 hours		MIL-STD-883E
2.3	Low Temp. Storage	- 40 ℃ ± 3 ℃ for 1000 ± 12 hours		
2.4	Thermal Shock	Total 100 cycles of the following temperature cycle 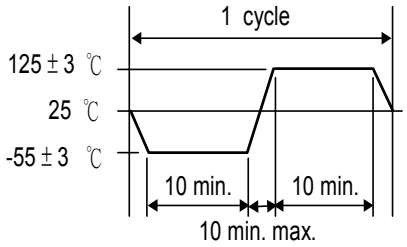		MIL-STD-883E
2.5	High Temp & Humidity	85℃ ± 3℃ , RH 85% , 1000Hrs		JIS C5023
2.6	Pressure Cooker Storage	121 ± 3℃ , RH100% , 2 bar , 240Hrs		JIS C6701