Micro-Power 1.5MHz, Low-Noise, RRIO, 1.8V CMOS Amplifiers

Features

- Precision Amplifiers for Cost-Sensitive Systems
- Low Noise: 25 nV/√Hz at 1 kHz
- Low Input Offset Voltage: 0.5 mV
- 1.5 MHz GBW for Unity-Gain Stable
- Micro-Power: 75 μA Supply Current Per Amplifier
- Single 1.8 V to 5.5 V Supply Voltage Range at 0 ℃ to 70 ℃
- Rail-to-Rail Input and Output
- Internal RF/EMI Filter
- Extended Temperature Range: −40℃ to +125℃

Ordering Information

DEVICE	Package Type	MARKING	Packing	Packing Qty
HGV6001UAIM5/TR	SOT-23-5	6001UA,AFNN(Note1)	REEL	3000pcs/reel
HGV6001AIM5/TR	SOT-23-5	6001A,AANN	REEL	3000pcs/reel
HGV6002AIM/TR	SOP-8	6002A	REEL	2500pcs/reel
HGV6002AIMM/TR	MSOP-8	6002A	REEL	3000pcs/reel
HGV6004AIM/TR	SOP-14	HGV6004A	REEL	2500pcs/reel
HGV6004AIMT/TR	TSSOP-14	6004A	REEL	2500pcs/reel

NOTE1:"NN"=Alphanumeric traceability code

General Description

The HGV600xA family of single, dual, and quad channel operational amplifiers is specifically designed for general-purpose cost-sensitive systems and applications. Featuring rail-to-rail input and output (RRIO) swings, and low quiescent current (typical 75 μA) combined with a wide bandwidth (1.5 MHz) and very low noise (25 nV/√Hz at 1 kHz) makes this family very attractive for a variety of battery-powered applications that require a good balance between cost and performance, such as audio outputs, consumer electronics, smoke detectors, portable medical devices and white goods. The low input bias current supports these amplifiers to be used in applications with megaohm source impedances.

The robust design of the HGV600xA amplifiers provides ease-of-use to the circuit designer: unity-gain stability with capacitive loads of up to 500 pF, integrated RF/EMI rejection filter, no phase reversal in overdrive conditions, and high electro-static discharge (ESD) protection (5kV HBM). The HGV600xA amplifiers are optimized for operation at voltages as low as +1.8 V (±0.9 V) and up to +5.5 V (±2.75 V) at the temperature range of 0 ℃ to 70 ℃, and operation at voltages from +2.0 V (±1.0 V) to +5.5 V (±2.75 V) over the extended temperature range of −40 ℃ to +125 ℃.

The HGV6001A (single) is available in both SOT23-5 packages. The HGV6001UA (single) is available in both SOT23-5 packages. The HGV6002A (dual) is offered in SOP-8 and MSOP-8 packages. The quad-channel HGV6004A is offered in SOP-14 and TSSOP-14 packages.

Applications

- Battery-Powered Instruments:
  - Consumer, Industrial, Medical, Notebooks
- Audio Outputs
- Wireless Sensors:
  - Home Security, Remote Sensing, Wireless Metering
- Sensor Signal Conditioning:
  - Sensor Interfaces, Loop-Powered, Active Filters

Pin Configurations (Top View)

HGV6001A

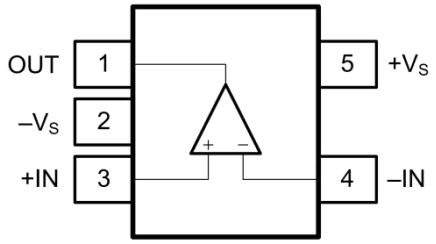

SOT-23-5

HGV6001UA

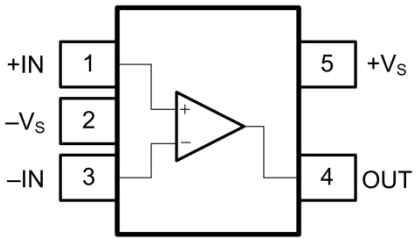

SOT-23-5

HGV6002A

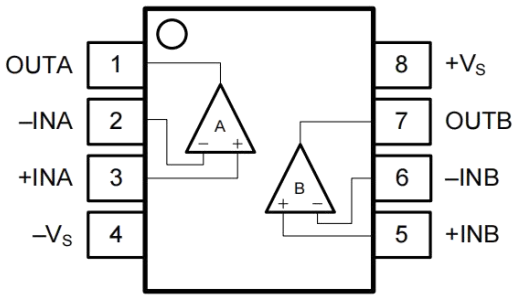

SOP-8/MSOP-8

HGV6004A

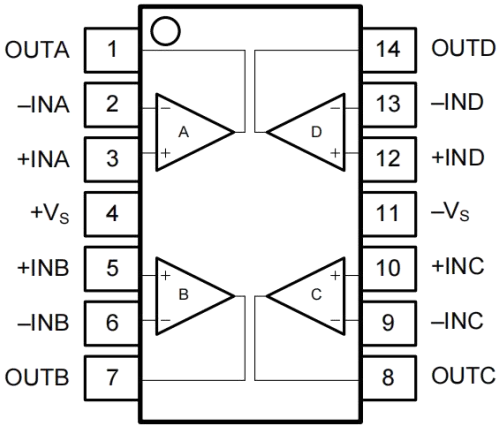

SOP-14/TSSOP-14

Pin Description

Symbol	Description
–IN	Inverting input of the amplifier. The voltage range is from (V_{S-} – 0.1V) to (V_{S+} + 0.1V).
+IN	Non-inverting input of the amplifier. This pin has the same voltage range as –IN.
$+V_S$	Positive power supply.
$-V_S$	Negative power supply.
OUT	Amplifier output.

Limiting Value

In accordance with the Absolute Maximum Rating System (IEC 60134).

Parameter	Absolute Maximum Rating
Supply Voltage, V_{S+} to V_{S-}	10.0 V
Signal Input Terminals: Voltage, Current	V_{S-} – 0.5 V to V_{S+} + 0.5 V, ±10 mA
Output Short-Circuit	Continuous
Storage Temperature Range, T_{stg}	–65 ℃ to +150 ℃
Junction Temperature, T_J	150 ℃
Lead Temperature Range (Soldering 10 sec)	260 ℃

Note:Absolute Maximum Ratings indicate limits beyond which damage to the device may occur. Operating Ratings indicate conditions for which the device is intended to be functional, but specific performance is not ensured.

ESD Rating

Parameter	Item	Value	Unit
Electrostatic Discharge Voltage	Human body model (HBM), per MIL-STD-883J / Method 3015.9 (1)	±5000	V
	Charged device model (CDM), per ESDA/JEDEC JS-002-2014 (2)	±2000	V
	Machine model (MM), per JESD22-A115C	±250	V

(1) JEDEC document JEP155 states that 500-V HBM allows safe manufacturing with a standard ESD control process. Manufacturing with less than 500-V HBM is possible if necessary precautions are taken.

(2) JEDEC document JEP157 states that 250-V CDM allows safe manufacturing with a standard ESD control process. Manufacturing with less than 250-V CDM is possible if necessary precautions are taken.

Electrical Characteristics

V_S = 5.0V, T_A = +25℃, V_{CM} = V_S /2, V_O = VS /2, and R_L = 10kΩ connected to V_S /2, unless otherwise noted.
Boldface limits apply over the specified temperature range, TA = −40 to +125 ℃.

Symbol	Parameter	Conditions	Min.	Typ.	Max.	Unit
OFFSET VOLTAGE						
V_{OS}	Input offset voltage			±0.5	±2.5	mV
		T_A = −40 to +125 ℃			**±2.8**	
V_{OS} TC	Offset voltage drift	T_A = −40 to +125 ℃		**±1**	**3**	μV/℃
PSRR	Power supply rejection ratio	V_S = 2.0 to 5.5 V, V_{CM} < V_{S+} − 2V	80	110		dB
		T_A = −40 to +125 ℃	75			
INPUT BIAS CURRENT						
I_B	Input bias current			1		pA
		T_A = +85 ℃		150		
		T_A = +125 ℃		500		
I_{OS}	Input offset current			1		pA
NOISE						
V_n	Input voltage noise	f = 0.1 to 10 Hz		5.6		μV_{P-P}
e_n	Input voltage noise density	f = 10 kHz		22		nV/√Hz
		f = 1 kHz		25		
I_n	Input current Noise density	f = 1 kHz		5		fA/√Hz
INPUT VOLTAGE						
V_{CM}	Common-mode voltage range		V_{S-}–0.1		V_{S+}+0.1	V
CMRR	Common-mode rejection ratio	V_S = 5.5 V, V_{CM} = −0.1 to 5.6 V	70	83		dB
		V_{CM} = 0 to 5.3 V, T_A = −40 to +125 ℃	**65**			
		V_S = 2.0 V, V_{CM} = −0.1 to 2.1 V	65	77		
		V_{CM} = 0 to 1.8 V, T_A = −40 to +125 ℃	**60**			
INPUT IMPEDANCE						
C_{IN}	Input capacitance	Differential		2.0		pF
		Common mode		3.5		
OPEN-LOOP GAIN						
A_{VOL}	Open-loop voltage gain	R_L = 25 kΩ, V_O = 0.05 to 3.5 V	90	105		dB
		T_A = −40 to +125 ℃	**85**			
		R_L = 2 kΩ, V_O = 0.15 to 3.5 V	85	100		
		T_A = −40 to +125 ℃	**80**			

FREQUENCY RESPONSE						
GBW	Gain bandwidth product			1.5		MHz
SR	Slew rate	G = +1, C_L = 100 pF, V_O = 1.5 to 3.5 V		1.2		V/μs
THD+N	Total harmonic distortion + noise	G = +1, f = 1 kHz, V_O = 1 V_{RMS}		0.002		%
t_S	Settling time	To 0.1%, G = +1, 1V step		1.2		μs
		To 0.01%, G = +1, 1V step		1.5		
t_{OR}	Overload recovery time	To 0.1%, V_{IN} * Gain > V_S		2		μs
OUTPUT						
V_{OH}	High output voltage swing	R_L = 25 kΩ	V_{S+}–9	V_{S+}–5		mV
		R_L = 2 kΩ	V_{S+}–95	V_{S+}–63		
V_{OL}	Low output voltage swing	R_L = 25 kΩ		V_{S-}+3.5	V_{S-}+6	mV
		R_L = 2 kΩ		V_{S-}+43	V_{S-}+65	
I_{SC}	Short-circuit current	Source current through 10Ω		45		mA
		Sink current through 10Ω		55		
POWER SUPPLY						
V_S	Operating supply voltage	T_A = 0 to +70 ℃	1.8		5.5	V
		T_A = −40 to +125 ℃	**2.0**		**5.5**	
I_Q	Quiescent current (per amplifier)			75	125	μA
		T_A = −40 to +125 ℃			**160**	
THERMAL CHARACTERISTICS						
T_A	Operating temperature range(1)		–40		+125	℃
θ_{JA}	Package Thermal Resistance	SOT23-5		190		℃/W
		MSOP-8		201		
		SOP-8		125		
		TSSOP-14		112		
		SOP-14		115		

Note(1):Operating temperature range: -40°C to +125°C. This product is designed for industrial grade applications. For automotive grade versions compliant with AEC-Q100, please conduct internal screening per the standard or contact our sales team for availability.

Typical Performance Characteristics

At T_A = +25℃, V_{CM} = V_S /2, and R_L = 10kΩ connected to V_S /2, unless otherwise noted

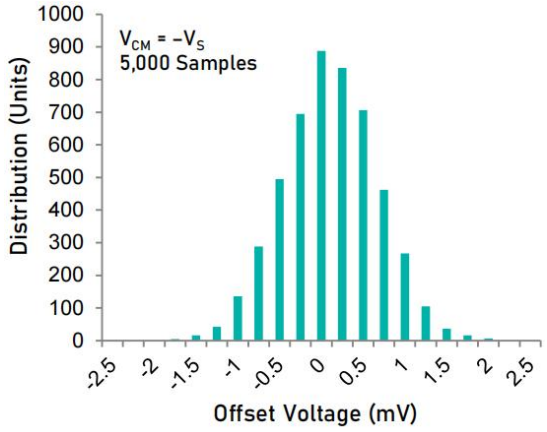

Offset Voltage Production Distribution

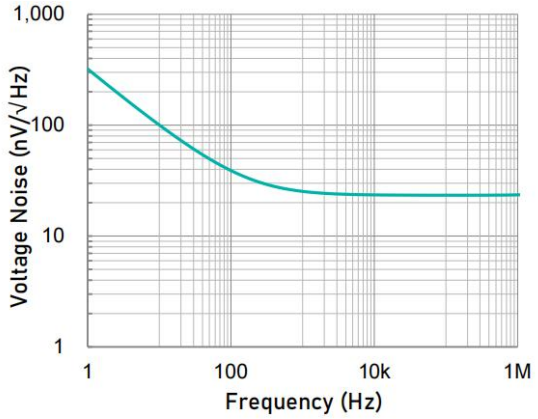

Input Voltage Noise Spectral Density as a function of Frequency.

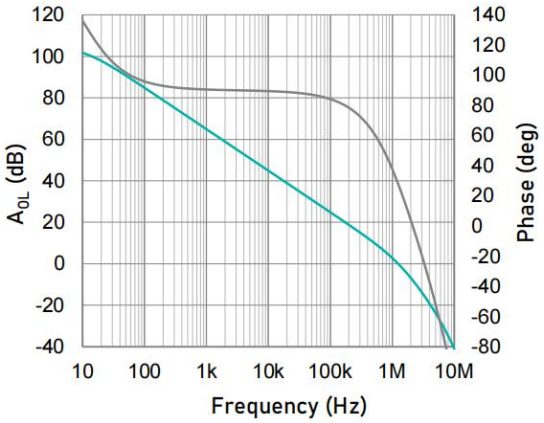

Open-loop Gain and Phase as a function of Frequency.

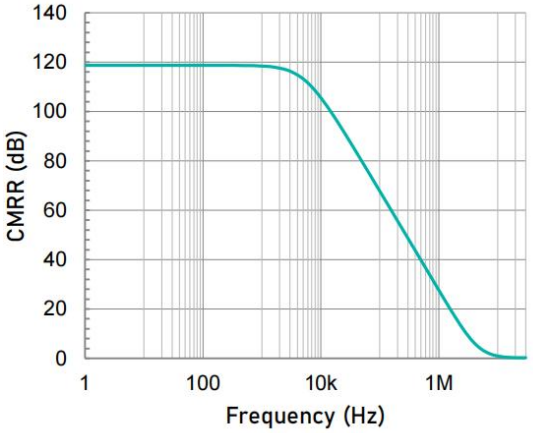

Common-mode Rejection Ratio as a function of Frequency.

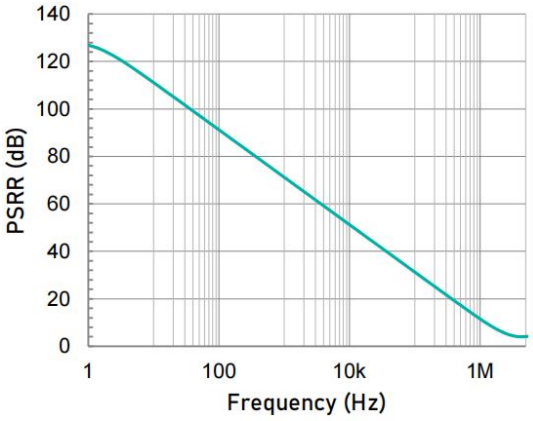

Power Supply Rejection Ratio as a function of Frequency.

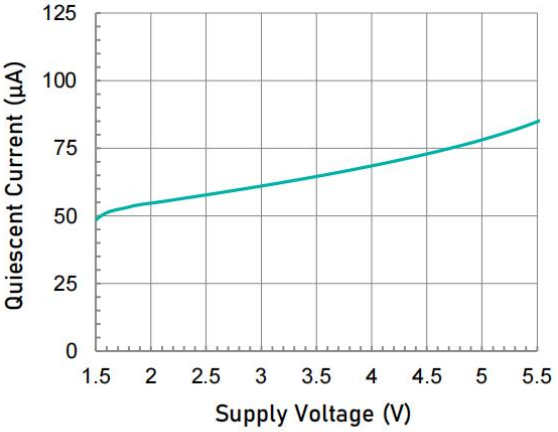

Quiescent Current as a function of Supply Voltage.

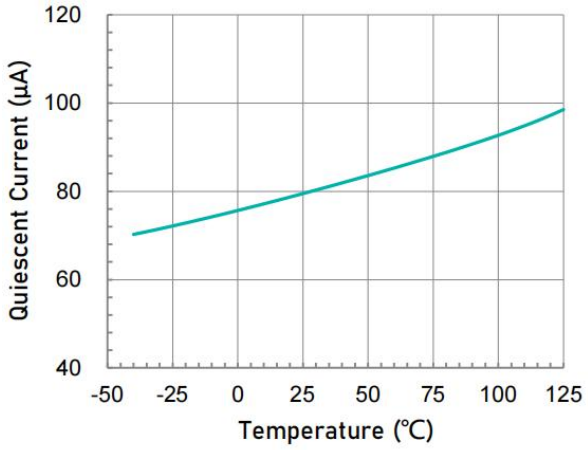

Quiescent Current as a function of Temperature.

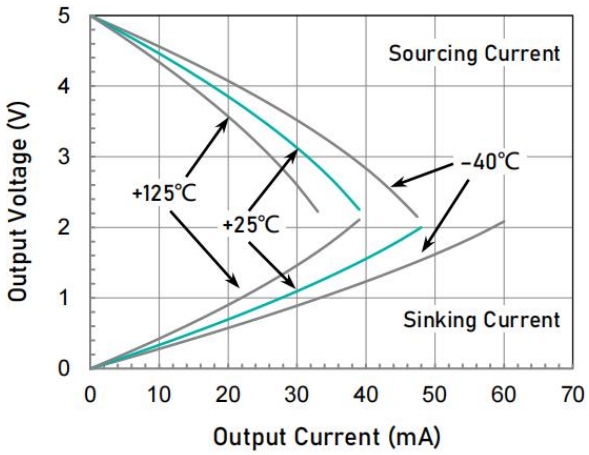

Output Voltage Swing as a function of Output Current.

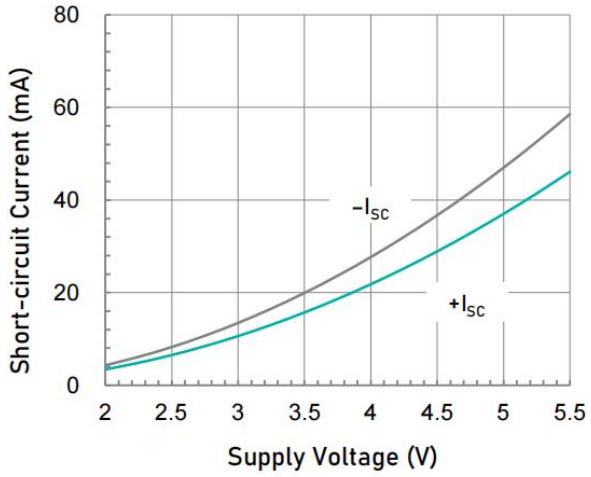

Short-circuit Current as a function of Supply Voltage.

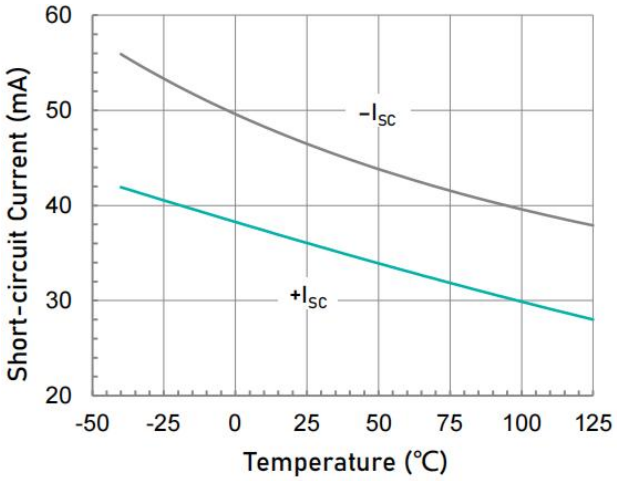

Short-circuit Current as a function of Temperature.

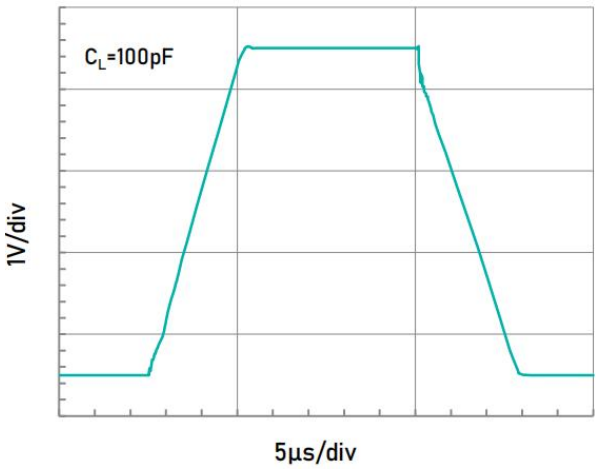

Large Signal Step Response.

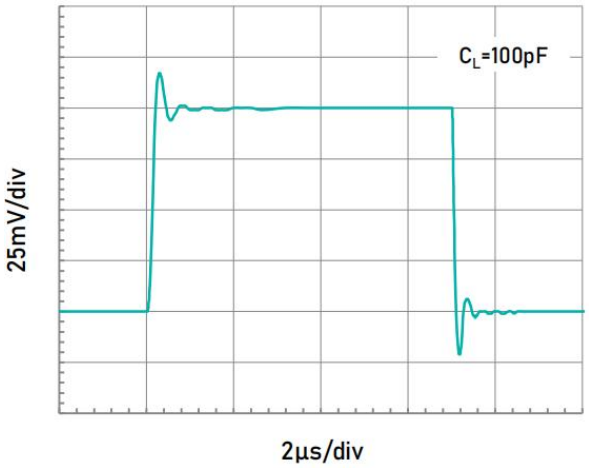

Small Signal Step Response.

Application Notes

The HGV600xA is a family of low-power, rail-to-rail input and output operational amplifiers specifically designed for portable applications. These devices operate from 1.8 V to 5.5 V at the temperature range of 0 ℃ to 70 ℃, are unity-gain stable, and suitable for a wide range of general-purpose applications. The class AB output stage is capable of driving ≤ 10kΩ loads connected to any point between V_{S+} and ground. The input common-mode voltage range includes both rails, and allows the HGV600xA family to be used in virtually any single-supply application. Rail-to-rail input and output swing significantly increases dynamic range, especially in low-supply applications, and makes them ideal for driving sampling analog-to-digital converters (ADCs).

The HGV600xA features 1.5MHz bandwidth and 1.2V/μs slew rate with only 75μA supply current per amplifier, providing good ac performance at very low power consumption. DC applications are also well served with a low input noise voltage of 25nV/√Hz at 1kHz, low input bias current, and an input offset voltage of 0.5mV typically. The typical offset voltage drift is 1μV/℃, over the full temperature range the input offset voltage changes only 100μV (0.5mV to 0.6mV).

OPERATING VOLTAGE

The HGV600xA family is optimized for operation at voltages as low as +1.8 V (±0.9 V) and up to +5.5 V (±2.75 V) at the temperature range of 0 ℃ to 70 ℃, and fully specified and ensured for operation from 2.0 V to 5.5 V (±1.0 V to ±2.75 V). In addition, many specifications apply from –40 ℃ to +125 ℃. Parameters that vary significantly with operating voltages or temperature are illustrated in the Typical Characteristics graphs.

NOTE: Supply voltages (V_{S+} to V_{S-}) higher than +10 V can permanently damage the device.

RAIL-TO-RAIL INPUT

The input common-mode voltage range of the HGV600xA series extends 100mV beyond the negative and positive supply rails. This performance is achieved with a complementary input stage: an Nchannel input differential pair in parallel with a Pchannel differential pair. The N-channel pair is active for input voltages close to the positive rail, typically V_{S+}–1.4 V to the positive supply, whereas the Pchannel pair is active for inputs from 100mV below the negative supply to approximately V_{S+}–1.4 V. There is a small transition region, typically V_{S+}–1.2 V to V_{S+}–1 V, in which both pairs are on. This 200mV transition region can vary up to 200mV with process variation. Thus, the transition region (both stages on) can range from V_{S+}–1.4 V to V_{S+}–1.2 V on the low end, up to V_{S+}–1 V to V_{S+}–0.8 V on the high end. Within this transition region, PSRR, CMRR, offset voltage, offset drift, and THD can be degraded compared to device operation outside this region.

The typical input bias current of the HGV600xA during normal operation is approximately 1pA. In overdriven conditions, the bias current can increase significantly. The most common cause of an overdriven condition occurs when the operational amplifier is outside of the linear range of operation. When the output of the operational amplifier is driven to one of the supply rails, the feedback loop requirements cannot be satisfied and a differential input voltage develops across the input pins. This differential input voltage results in activation of parasitic diodes inside the front-end input chopping switches that combine with electromagnetic interference (EMI) filter resistors to create the equivalent circuit. Notice that the input bias current remains within specification in the linear region.

INPUT EMI FILTER AND CLAMP CIRCUIT

Figure 1 shows the input EMI filter and clamp circuit. The HGV600xA op-amps have internal ESD protection diodes (D1, D2, D3, and D4) that are connected between the inputs and each supply rail. These diodes protect the input transistors in the event of electrostatic discharge and are reverse biased during normal operation. This protection scheme allows voltages as high as approximately 500mV beyond the rails to be applied at the input of either terminal without causing permanent damage. These ESD protection current-steering diodes also provide in-circuit, input overdrive protection, as long as the current is limited to 20mA as stated in the Absolute Maximum Ratings.

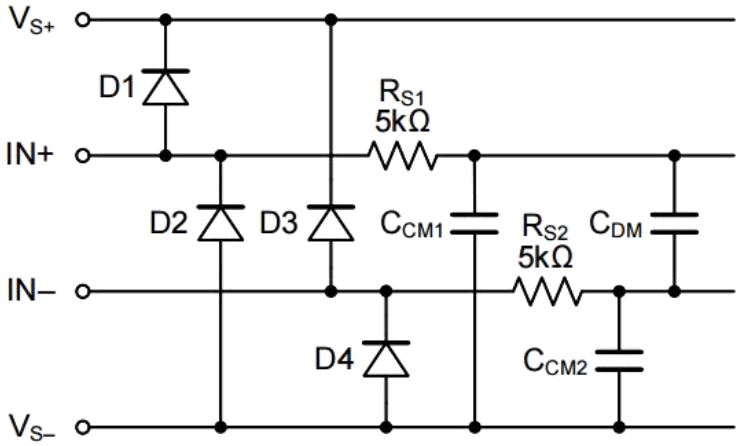

Figure 1. Input EMI Filter and Clamp Circuit

Operational amplifiers vary in susceptibility to EMI. If conducted EMI enters the operational amplifier, the dc offset at the amplifier output can shift from its nominal value when EMI is present. This shift is a result of signal rectification associated with the internal semiconductor junctions. Although all operational amplifier pin functions can be affected by EMI, the input pins are likely to be the most susceptible. The EMI filter of the HGV600xA family is composed of two 5kΩ input series resistors (R_{S1} and R_{S2}), two common-mode capacitors (C_{CM1} and C_{CM2}), and a differential capacitor (C_{DM}). These RC networks set the −3 dB low-pass cutoff frequencies at 35MHz for common-mode signals, and at 22MHz for differential signals.

RAIL-TO-RAIL OUTPUT

Designed as a micro-power, low-noise operational amplifier, the HGV600xA delivers a robust output drive capability. A class AB output stage with commonsource transistors is used to achieve full rail-to-rail output swing capability. For resistive loads up to 25kΩ, the output swings typically to within 5mV of either supply rail regardless of the power-supply voltage applied. Different load conditions change the ability of the amplifier to swing close to the rails. For resistive loads up to 2-kΩ, the output swings typically to within 63mV of the positive supply rail and within 43mV of the negative supply rail.

CAPACITIVE LOAD AND STABILITY

The HGV600xA family can safely drive capacitive loads of up to 500pF in any configuration. As with most amplifiers, driving larger capacitive loads than specified may cause excessive overshoot and ringing, or even oscillation. A heavy capacitive load reduces the phase margin and causes the amplifier frequency response to peak. Peaking corresponds to overshooting or ringing in the time domain. Therefore, it is recommended that external compensation be used if the HGV600xA op-amps must drive a load exceeding 500pF. This compensation is particularly important in the unity-gain configuration, which is the worst case for stability.

A quick and easy way to stabilize the op-amp for capacitive load drive is by adding a series resistor, R_{ISO}, between the amplifier output terminal and the load capacitance, as shown in Figure 2. R_{ISO} isolates the amplifier output and feedback network from the capacitive load. The bigger the R_{ISO} resistor value, the more stable V_{OUT} will be. Note that this method results in a loss of gain accuracy because R_{ISO} forms a voltage divider with the R_L .

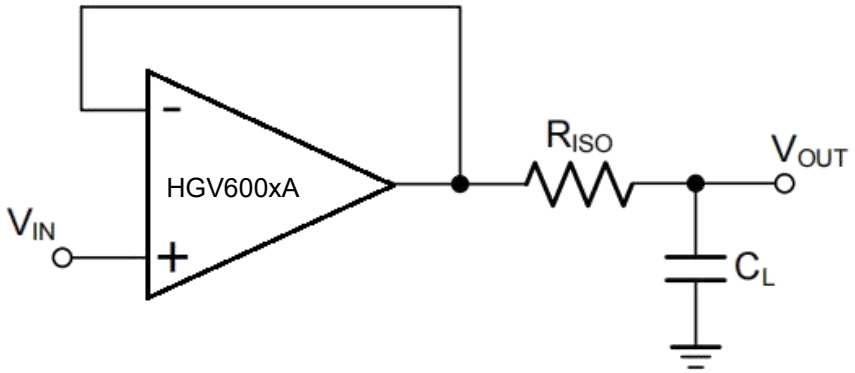

Figure 2. Indirectly Driving Heavy Capacitive Load

An improvement circuit is shown in Figure 3. It provides DC accuracy as well as AC stability. The R_F provides the DC accuracy by connecting the inverting signal with the output.

The C_F and R_{ISO} serve to counteract the loss of phase margin by feeding the high frequency component of the output signal back to the amplifier's inverting input, thereby preserving phase margin in the overall feedback loop.

For no-buffer configuration, there are two others ways to increase the phase margin: (a) by increasing the amplifier's gain, or (b) by placing a capacitor in parallel with the feedback resistor to counteract the parasitic capacitance associated with inverting node.

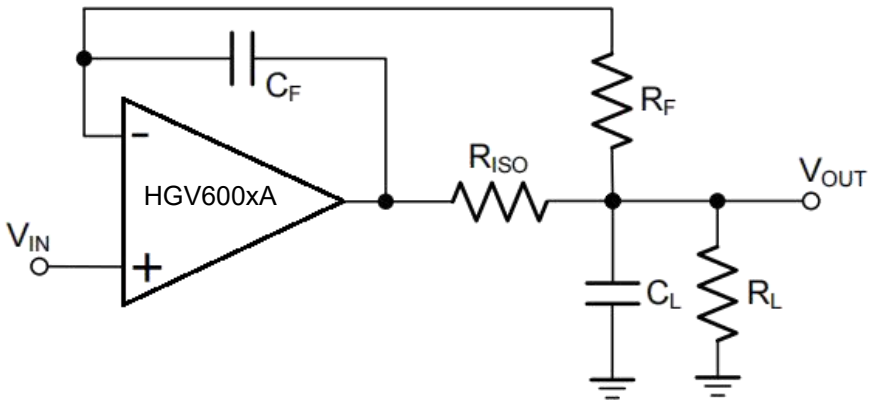

Figure 3. Indirectly Driving Heavy Capacitive Load with DC Accuracy

OVERLOAD RECOVERY

Overload recovery is defined as the time required for the operational amplifier output to recover from a saturated state to a linear state. The output devices of the operational amplifier enter a saturation region when the output voltage exceeds the rated operating voltage, either because of the high input voltage or the high gain. After the device enters the saturation region, the charge carriers in the output devices require time to return back to the linear state. After the charge carriers return back to the linear state, the device begins to slew at the specified slew rate. Thus, the propagation delay in case of an overload condition is the sum of the overload recovery time and the slew time. The overload recovery time for the HGV600xA family is approximately 2μs.

EMI REJECTION RATIO

Circuit performance is often adversely affected by high frequency EMI. When the signal strength is low and transmission lines are long, an op-amp must accurately amplify the input signals. However, all opamp pins — the non-inverting input, inverting input, positive supply, negative supply, and output pins — are susceptible to EMI signals. These high frequency signals are coupled into an op-amp by various means, such as conduction, near field radiation, or far field radiation. For example, wires and printed circuit board (PCB) traces can act as antennas and pick up high frequency EMI signals.

Amplifiers do not amplify EMI or RF signals due to their relatively low bandwidth. However, due to the nonlinearities of the input devices, op-amps can rectify these out of band signals. When these high frequency signals are rectified, they appear as a dc offset at the output.

The HGV600xA op-amps have integrated EMI filters at their input stage. A mathematical method of measuring EMIRR is defined as follows:

$$EMIRR = 20 \log (V_{IN_PEAK} / \Delta V_{OS})$$

INPUT-TO-OUTPUT COUPLING

To minimize capacitive coupling, the input and output signal traces should not be parallel. This helps reduce unwanted positive feedback.

MAXIMIZING PERFORMANCE THROUGH PROPER LAYOUT

To achieve the maximum performance of the extremely high input impedance and low offset voltage of the HGV600xA op-amps, care is needed in laying out the circuit board. The PCB surface must remain clean and free of moisture to avoid leakage currents between adjacent traces. Surface coating of the circuit board reduces surface moisture and provides a humidity barrier, reducing parasitic resistance on the board. The use of guard rings around the amplifier inputs further reduces leakage currents. Figure 4 shows proper guard ring configuration and the top view of a surface-mount layout. The guard ring does not need to be a specific width, but it should form a continuous loop around both inputs. By setting the guard ring voltage equal to the voltage at the non-inverting input, parasitic capacitance is minimized as well. For further reduction of leakage currents, components can be mounted to the PCB using Teflon standoff insulators.

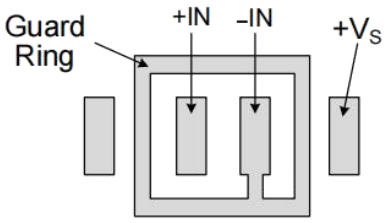

Figure 4. Use a guard ring around sensitive pins

Other potential sources of offset error are thermoelectric voltages on the circuit board. This voltage, also called Seebeck voltage, occurs at the junction of two dissimilar metals and is proportional to the temperature of the junction. The most common metallic junctions on a circuit board are solder-toboard trace and solder-to-component lead. If the temperature of the PCB at one end of the component is different from the temperature at the other end, the resulting Seebeck voltages are not equal,resulting in a thermal voltage error.

This thermocouple error can be reduced by using dummy components to match the thermoelectric error source. Placing the dummy component as close as possible to its partner ensures both Seebeck voltages are equal, thus canceling the thermocouple error. Maintaining a constant ambient temperature on the circuit board further reduces this error. The use of a ground plane helps distribute heat throughout the board and reduces EMI noise pickup.

Typical Application Circuits

DIFFERENTIAL AMPLIFIER

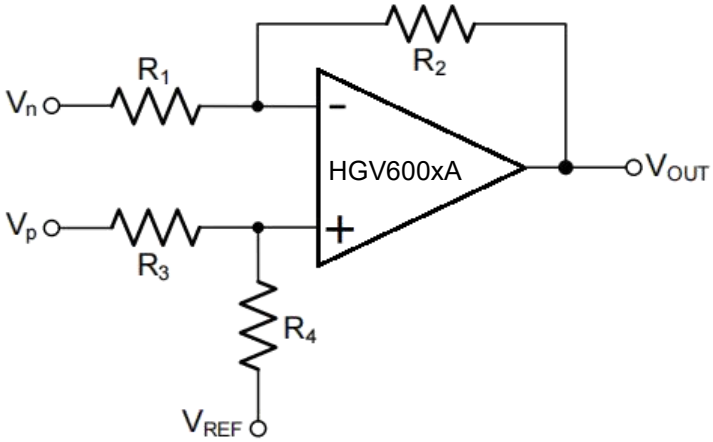

Figure 5. Differential Amplifier

The circuit shown in Figure 5 performs the difference function. If the resistors ratios are equal $R_4 / R_3 = R_2 / R_1$, then:

$$V_{OUT} = (V_p - V_n) \times R_2 / R_1 + V_{REF}$$

INSTRUMENTATION AMPLIFIER

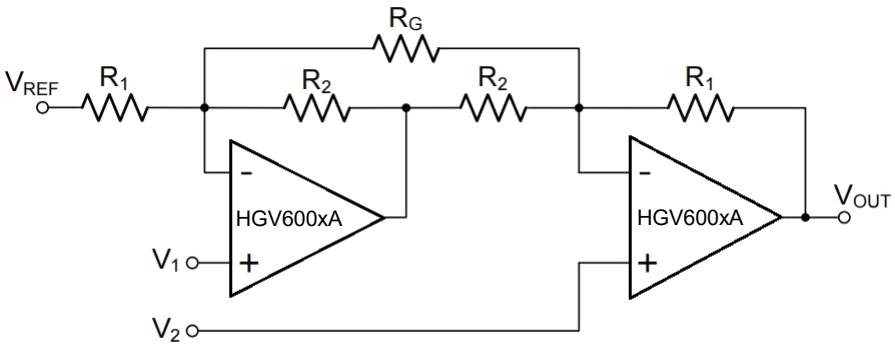

$$V_{OUT} = (V_1 - V_2)(1 + \frac{R_1}{R_2} + \frac{2R_1}{R_G}) + V_{REF}$$

Figure 6. Instrumentation Amplifier

The HGV600xA family is well suited for conditioning sensor signals in battery-powered applications. Figure 6 shows a two op-amp instrumentation amplifier, using the HGV600xA op-amps. The circuit works well for applications requiring rejection of common-mode noise at higher gains. The reference voltage (V_{REF}) is supplied by a low-impedance source. In single voltage supply applications, the V_{REF} is typically V_S /2.

BUFFERED CHEMICAL SENSORS

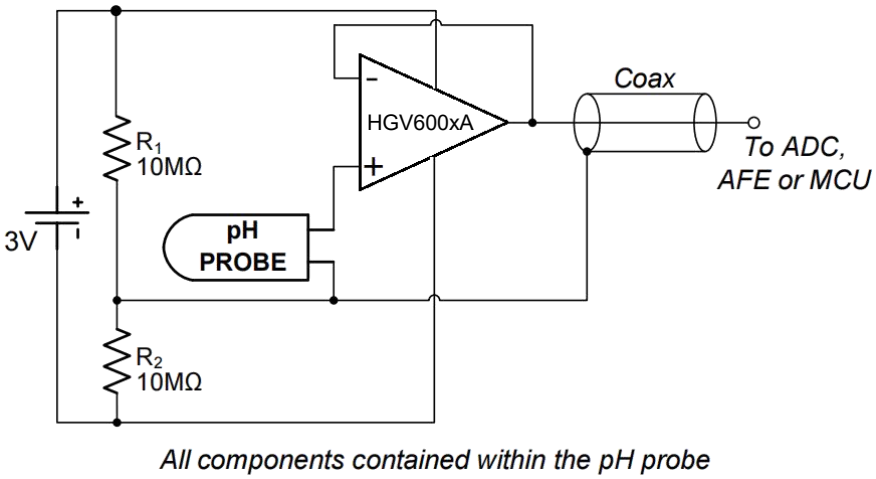

Figure 7. Buffered pH Probe

The HGV600xA family has input bias current in the pA range. This is ideal in buffering high impedance chemical sensors, such as pH probes. As an example, the circuit in Figure 7eliminates expansive low-leakage cables that that is required to connect a pH probe (general purpose combination pH probes, e.g Corning 476540) to metering ICs such as ADC, AFE and/or MCU. A HGV600xA op-amp and a lithium battery are housed in the probe assembly. A conventional low-cost coaxial cable can be used to carry the op-amp's output signal to subsequent ICs for pH reading.

MOTOR PHASE CURRENT SENSING AMPLIFIER

The current sensing amplification shown in Figure 8 has a slew rate of 2πfVPP for the output of sine wave signal, and has a slew rate of 2fVPP for the output of triangular wave signal. In most of motor control systems, the PWM frequency is at 10 kHz to 20 kHz, and one cycle time is 100 μs for a 10 kHz of PWM frequency. In current shunt monitoring for a motor phase, the phase current is converted to a phase voltage signal for ADC sampling. This sampling voltage signal must be settled before entering the ADC. As the Figure 8 shown, the total settling time of a current shunt monitor circuit includes: the rising edge delay time (t_{SR}) due to the op-amp's slew rate, and the measurement settling time (t_{SET}). For a 3-shunt solution in motor phase current sensing, if the smaller duty cycle of the PWM is defined at 45% (In fact, the phase with minimum PWM duty cycle, such as 5%, is not detected current directly, and it can be calculated from the other two phase currents), and the tSR is required at 20% of a total time window for a phase current monitoring, in case of a 3.3 V motor control system (3.3 V MCU with 12 bit ADC), the op-amp's slew rate should be more than:

3.3V / (100μs× 45% × 20%) = 0.37 V/μs

At the same time, the op-amp's bandwidth should be much greater than the PWM frequency, like 10 time at least.

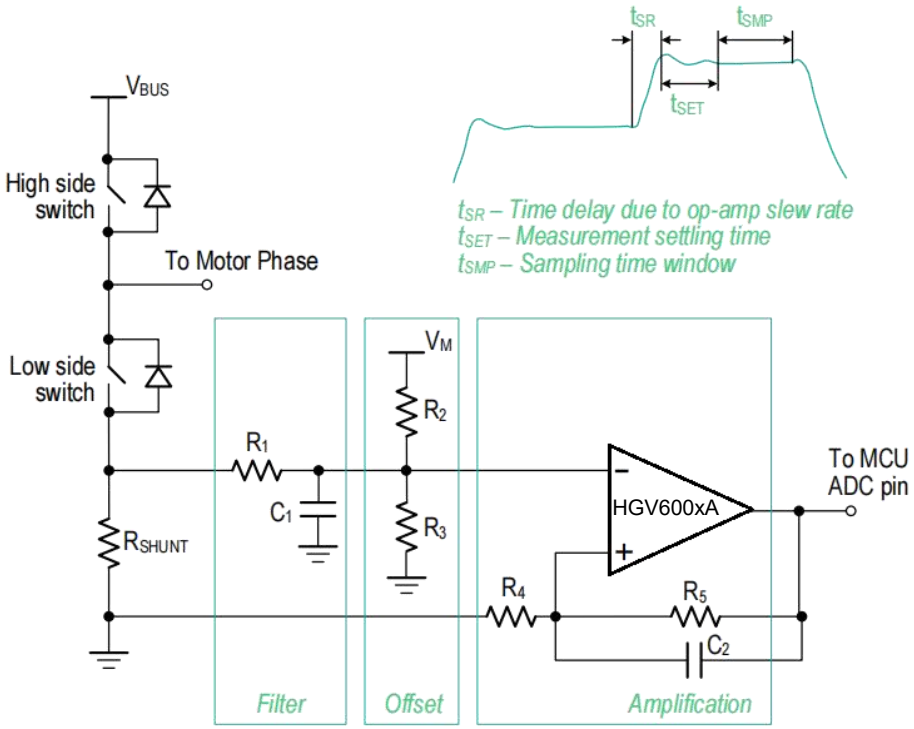

Figure 8. Current Shunt Monitor Circuit

Physical Dimensions

SOP-8

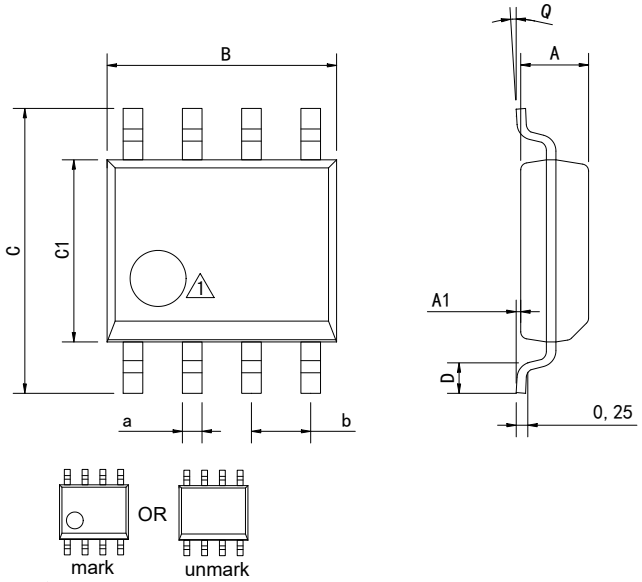

1 Package top mark may be in lower left corner or unmark

Dimensions In Millimeters(SOP-8)									
Symbol:	A	A1	B	C	C1	D	Q	a	b
Min:	1.35	0.05	4.90	5.80	3.80	0.40	0°	0.35	1.27 BSC
Max:	1.55	0.20	5.10	6.20	4.00	0.80	8°	0.45	

SOP-14

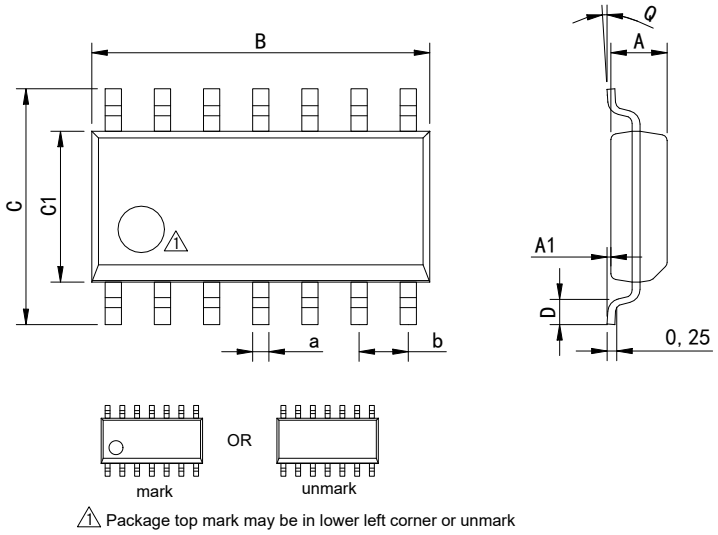

1 Package top mark may be in lower left corner or unmark

Dimensions In Millimeters(SOP-14)									
Symbol:	**A**	**A1**	**B**	**C**	**C1**	**D**	**Q**	**a**	**b**
Min:	1.35	0.05	8.55	5.80	3.80	0.40	0°	0.35	1.27 BSC
Max:	1.55	0.20	8.75	6.20	4.00	0.80	8°	0.45	

Physical Dimensions

MSOP-8

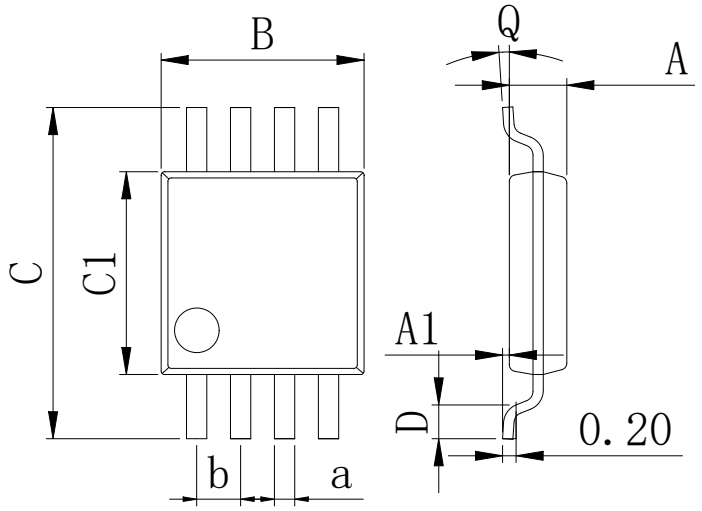

Dimensions In Millimeters(MSOP-8)									
Symbol:	**A**	**A1**	**B**	**C**	**C1**	**D**	**Q**	**a**	**b**
Min:	0.80	0.05	2.90	4.75	2.90	0.35	0°	0.25	0.65 BSC
Max:	0.90	0.20	3.10	5.05	3.10	0.75	8°	0.35	

TSSOP-14

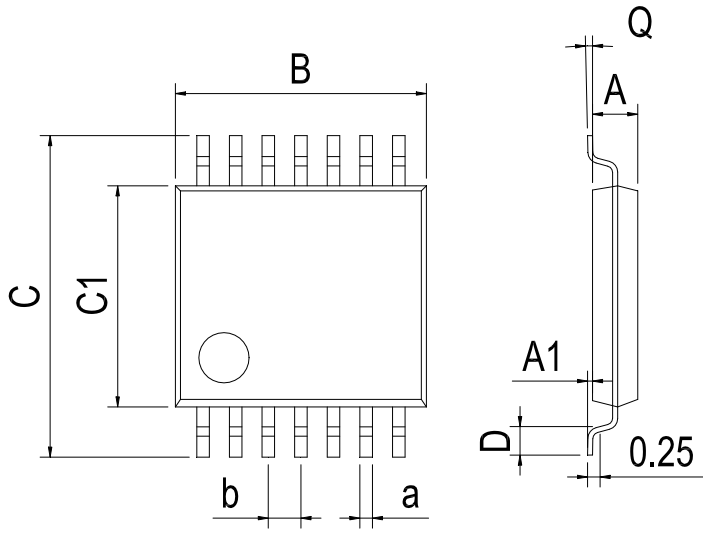

Dimensions In Millimeters(TSSOP-14)									
Symbol:	**A**	**A1**	**B**	**C**	**C1**	**D**	**Q**	**a**	**b**
Min:	0.85	0.05	4.90	6.20	4.30	0.40	0°	0.20	0.65 BSC
Max:	0.95	0.20	5.10	6.60	4.50	0.80	8°	0.25	

Physical Dimensions

SOT-23-5

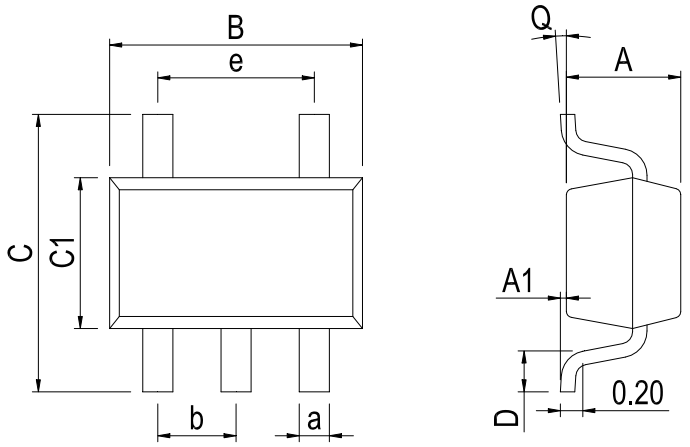

Dimensions In Millimeters(SOT-23-5)										
Symbol:	**A**	**A1**	**B**	**C**	**C1**	**D**	**Q**	**a**	**b**	**e**
Min:	1.00	0.00	2.82	2.65	1.50	0.30	0°	0.30	0.95 BSC	1.90 BSC
Max:	1.15	0.15	3.02	2.95	1.70	0.60	8°	0.50		

Revision History

REVISION NUMBER	DATE	REVISION	PAGE
V1.0	2020-5	New	1-20
V1.1	2025-7	Document Reformatting	1-20
V1.2	2025-12	Update important statements	20

IMPORTANT STATEMENT:

Huaguan Semiconductor reserves the right to change products and services offered without prior notice. Customers should obtain the latest relevant information before placing orders and verify that such information is current and complete. Huaguan Semiconductor assumes no responsibility or liability for altered documents.

Customers are responsible for complying with safety standards and implementing safety measures when using Huaguan Semiconductor products in system design and end-product manufacturing. You assume full responsibility for: selecting the appropriate Huaguan Semiconductor products for your application; designing, validating, and testing your application; and ensuring that your application complies with applicable standards and all other safety, security, or other requirements. This is to prevent potential risks that may lead to personal injury or property damage.

Huaguan Semiconductor products are not approved for use in life support, military, aerospace, or other high-risk applications. Huaguan products are neither intended nor warranted for use in such systems or equipment. Any failure or malfunction may lead to personal injury or severe property damage. Such applications are deemed "Unsafe Use." Unsafe Use includes, but is not limited to: surgical and medical equipment, nuclear energy control equipment, aircraft or spacecraft instruments, control or operation of vehicle power, braking, or safety systems, traffic signal instruments, all types of safety devices, and any other applications intended to support or sustain life. Huaguan Semiconductor shall not be liable for consequences resulting from Unsafe Use in these fields. Users must independently evaluate and assume all risks. Any issues, liabilities, or losses arising from the use of products beyond their approved applications shall be solely borne by the user. Users may not claim any compensation from Huaguan Semiconductor based on these terms. If any third party claims against Huaguan Semiconductor due to such Unsafe Use, the user shall compensate Huaguan Semiconductor for all resulting damages and liabilities.

Huaguan Semiconductor provides technical and reliability data (including datasheets), design resources (including reference designs), application or other design advice, web tools, safety information, and other resources for its semiconductor products. However, no guarantee is made that these resources are free from defects, and no express or implied warranties are provided. The use of testing and other quality control techniques is limited to Huaguan Semiconductor's quality assurance scope. Not all parameters of each device are tested.

Huaguan Semiconductor's documentation authorizes you to use these resources only for developing applications related to the products described herein. You are not granted rights to any other intellectual property of Huaguan Semiconductor or any third party. Any other reproduction or display of these resources is strictly prohibited. You shall fully indemnify Huaguan Semiconductor and its agents against any claims, damages, costs, losses, and liabilities arising from your use of these resources. Huaguan Semiconductor shall not be held responsible.