Product Description

The HAD8541(single),HAD8542(dual) and HAD8544(quad) are low voltage micro power CMOS voltage feedback operational amplifiers. With an excellent bandwidth of 1.2MHz,aslew rateof 1V/μs,and a quiescent current of 85μA per amplifier at 5V,the HAD854x family can bedesigned into a wide range of applications.
The HAD854x op-amps are specifically designed for general-purpose applications with optimalper formance. They have a wide input common-mode voltage range and excellent output voltage swings,and the maximum input offset voltage are 3.0mV.These parts provide rail-to-rail output swing into heavy loads.The HAD854x family is specified for single or dual power supplies of +2.2V to +5.5V.
The HAD8541 is available in 5-lead SOT-353 and SOT-23,and 8-lead SOP packages.
The HAD8542 is available in 8-lead MSOP and SOP packages.
The HAD8544 is available in 14-lead SOP packages.

Features

- Low Offset Voltage: 3.0 mV Maximum
- Gain-Bandwidth Product: 1.2MHz
- High Slew Rate: 1.0 V/us
- Low Power: 85uA per Amplifier Supply Current
- Unity Gain Stable
- Rail-to-Rail Input and Output
- Input Voltage Range: -0.2 to +5.2 V at 5V Supply
- Operating Power Supply:+2.2 to +5.5 V
- Operating Temperature Range: -40°C to +125°C
- ESD Rating: HBM – 4kV, CDM – 2kV

Applications

- Smoke/Gas/Environment Sensors
- Audio Outputs
- Active Filters
- ASIC Input or Output Amplifier
- Sensor Interfaces
- Portable Equipment
- Battery-Powered Instrumentation

Pin Configuration

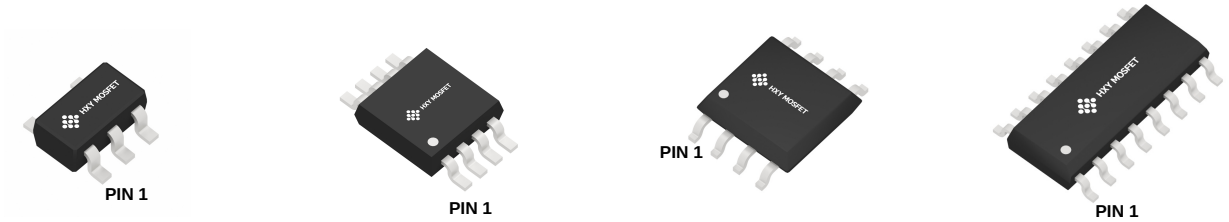

SOT-353/SOT-23-5L MSOP-8 SOP-8 SOP-14

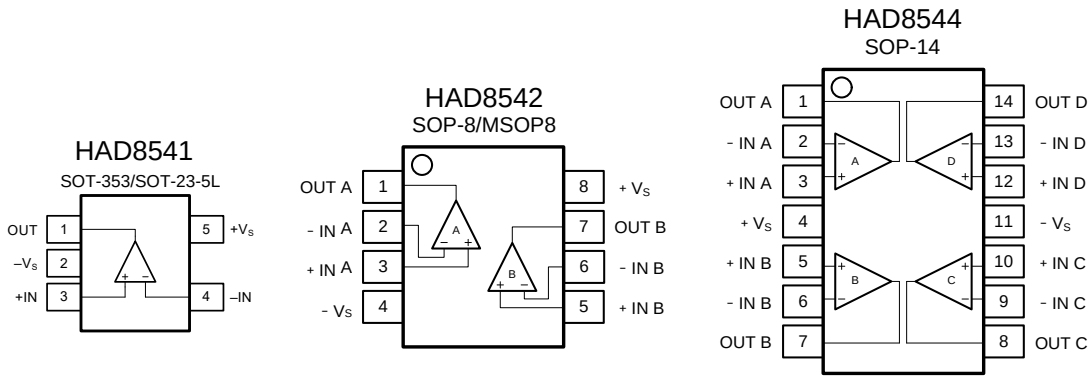

Figure 1. Pin Assignment Diagram

Absolute Maximum Ratings

Supply Voltage,+$V_S$to-V_S.....7V
Input CommonMode VoltageRange
.....(-V_S) -0.5V to (+V_S) +0.5V
Storage Temperature Range.....-65℃ to +150℃
Junction Temperature.....+160℃
Lead Temperature(Soldering 10sec).....+260℃
ESD Susceptibility
HBM.....4000V
MM.....400V
CDM.....2000V

Recommended Operating Conditions

Operating Temperature Range .....-40℃ to +125℃

Note: Stress greater than those listed under Absolute Maximum Ratings may cause permanent damage to the device. This is a stress rating only and functional operation of the device at these or any other conditions outside those indicated in the operational sections of this specification are not implied.

Exposure to absolute maximum rating conditions for extended periods may affect reliability.

Oederomg Omforation

Type Number	Package Name	Package Quantity
HAD8541ARTZ	SOT-23-5L	3000
HAD8541AKSZ	SOT-353	3000
HAD8542ARZ	SOP-8L	2500
HAD8542ARMZ	MSOP-8L	3000
HAD8544ARZ	SOP-14L	2500

Electrical Characteristics

V_S = 5.0V,T_A = +25℃, V_{CM} = V_S / 2, V_O = V_S / 2, and R_L = 10kΩ connected to V_S / 2, unless other wise noted.
Boldface limits apply over the specified temperature range, T_A = -40 to + 125°C.

Symbol	Parameter	Conditions	Min.	Typ.	Max.	Unit
V_{OS}	Input offset voltage			±1.0	±3.0	mV
$V_{OS}T_C$	Offset voltage drift	T_A= −40 to +125 °C		±1	3.5	μV/°C
PSRR	Power supply rejection ratio	V_S= 2.2 to 5.5 V, V_{CM}< V_{S+}-2V	80	110		dB
		T_A= −40 to +125 °C	75			
I_B	Input bias current			5	50	pA
		T_A= +85 °C			200	
		T_A= +125 °C			2000	
I_{OS}	Input offset current			10	50	pA
V_n	Input voltage noise	f = 0.1 to 10 Hz		6		$μV_{P-P}$
e_n	Input voltage noise density	f = 10 kHz		27		nV/√Hz
		f = 1 kHz		30		
I_n	Input current noise density	f = 1 kHz		5		fA/√Hz

Electrical Characteristics

V_S = 5.0V,T_A = +25℃, V_{CM} = V_S / 2, V_O = V_S / 2, and R_L = 10kΩ connected to V_S / 2, unless other wise noted.
Boldface limits apply over the specified temperature range, T_A = -40 to + 125°C.

Symbol	Parameter	Conditions	Min.	Typ.	Max.	Unit
V_{CM}	Common-mode voltage range		V_{S-}–0.1		V_{S+}+0.1	V
CMRR	Common-mode rejection ratio	V_S= 5.5 V,V_{CM}= −0.1 to 5.6 V	70	83		dB
		V_{CM}= 0 to 5.3 V, T_A= -40 to +125 °C	**65**			
		V_S= 2.2 V,V_{CM}= −0.1 to 2.2 V	65	**77**		
		V_{CM}= 0 to 2.2 V,T_A= -40 to +125 °C	**60**			
C_{IN}	Input capacitance	Differential		2.0		pF
		Common mode		3.5		
A_{VOL}	Open-loop voltage gain	R_L = 25 kΩ, V_O = 0.05 to 3.5 V	90	105		dB
		T_A= -40 to +125 °C	**85**			
		R_L = 2 kΩ, V_O = 0.15 to 3.5 V	85	100		
		T_A= -40 to +125 °C	**80**			
GBW	Gainbandwidth product			1.2		MHz
SR	Slew rate	G = +1, C_L= 100 pF, V_O= 1.5 to 3.5 V		1.0		V/µs
THD+N	Total harmonic distortion + noise	G = +1, f = 1 kHz, V_O = 1 V_{RMS}		0.003		%
t_S	Settling time	To 0.1%, G = +1, 1V step		1.5		µs
		To 0.01%, G = +1, 1V step		1.8		
t_{OR}	Overload recovery time	To 0.1%, V_{IN}* Gain > V_S		2.5		µs
V_{OH}	High output voltage swing	R_L= 50 kΩ	V_{S+}–6	V_{S+}–3		mV
		R_L= 2 kΩ	V_{S+}–100	V_{S+}–65		
V_{OL}	Low output voltage swing	R_L= 50 kΩ		V_{S-}+2	V_{S-}+4	mV
		R_L= 2 kΩ		V_{S-}+43	V_{S-}+65	
I_{SC}	Short-circuit current	Source current through 10Ω		40		mA
		Sink current through 10Ω		50		
V_S	Operating supply voltage		2.2		5.5	V
I_Q	Quiescent current (per amplifier)			85	120	µA
		T_A= −40 to +125 ℃			**150**	
T_A	Operating temperature range		–40		+125	℃

Typical Performance Characteristics

At T_A = +25℃, V_{CM} = V_S/2, and R_L = 10kΩ connected to V_S/2, unless otherwise noted.

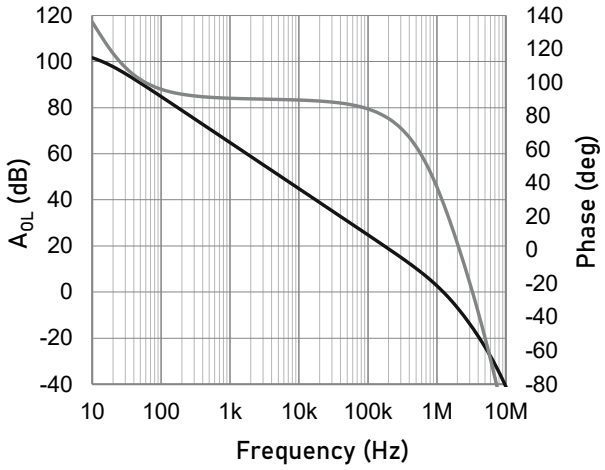

Open-loop Gain and Phase as a function of Frequency.

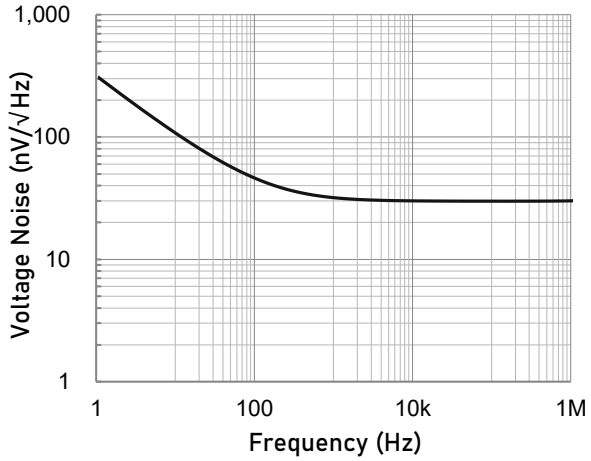

Input Voltage Noise Spectral Density as a function of Frequency.

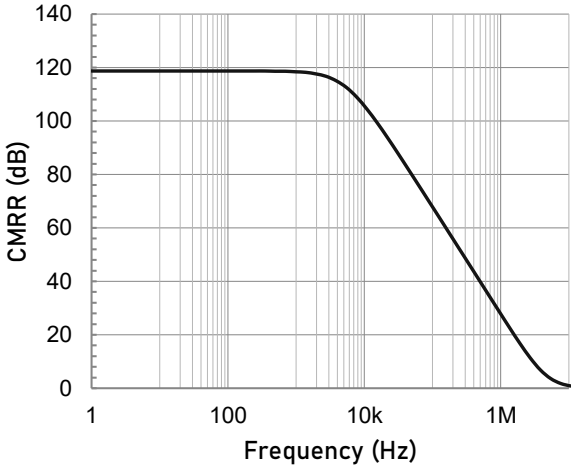

Common-mode Rejection Ratio as a function of Frequency.

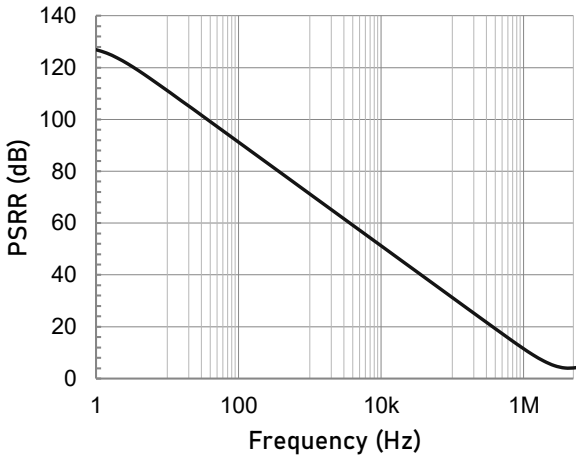

Power Supply Rejection Ratio as a function of Frequency.

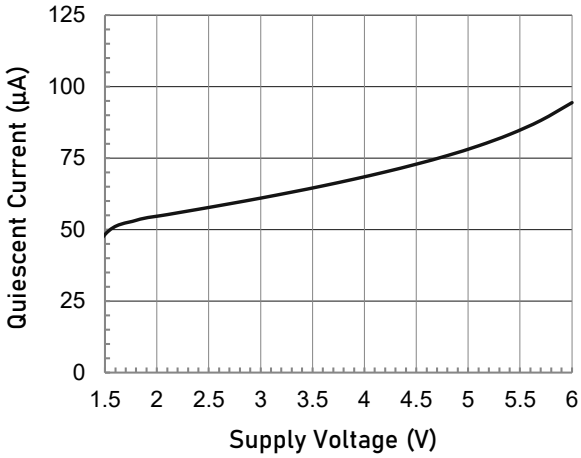

Quiescent Current as a function of Supply Voltage.

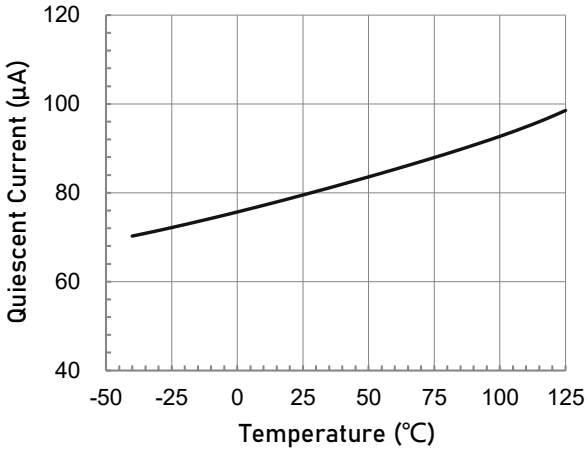

Quiescent Current as a function of Temperature.

Typical Performance Characteristics

At T_A = +25℃, V_{CM} = V_S/2, and R_L = 10kΩ connected to V_S/2, unless otherwise noted.

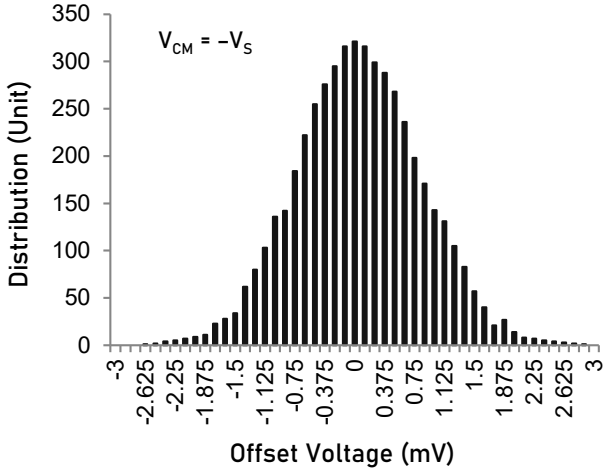

Offset Voltage Production Distribution

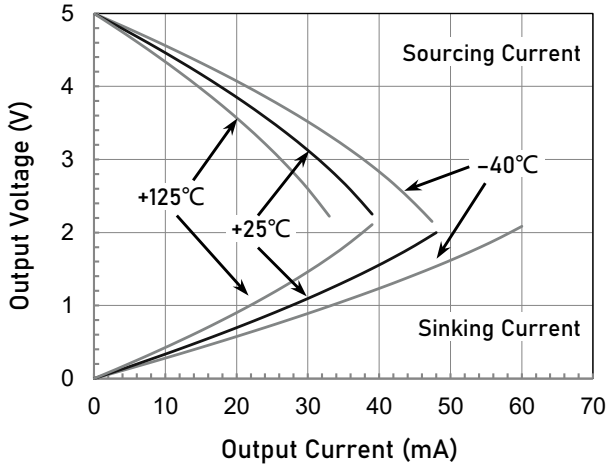

Output Voltage Swing as a function of Output Current.

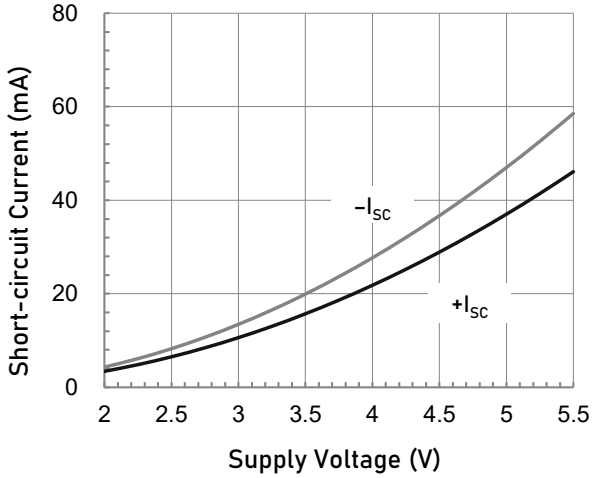

Short-circuit Current as a function of Supply Voltage.

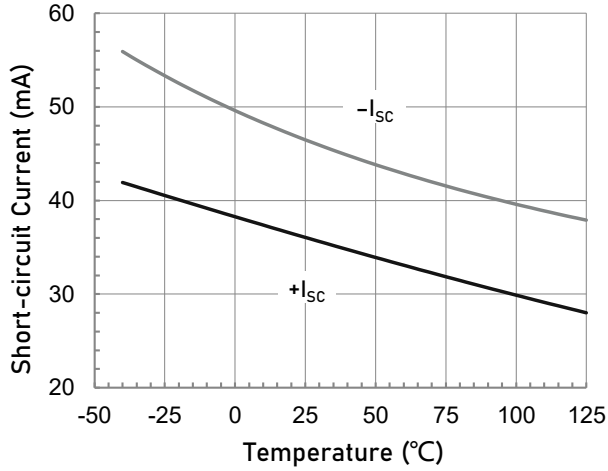

Short-circuit Current as a function of Temperature.

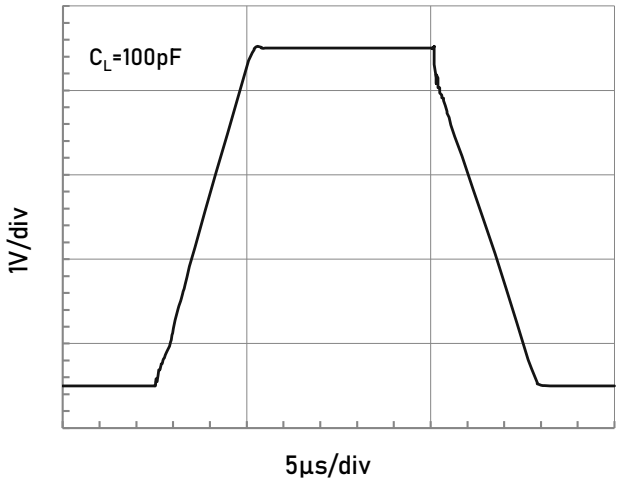

Large Signal Step Response.

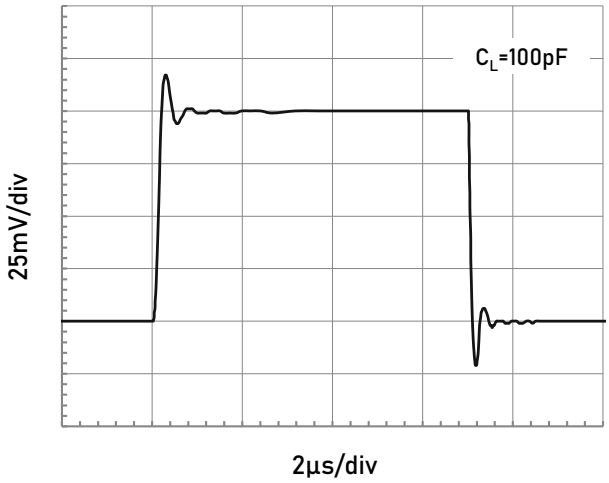

Small Signal Step Response.

Appilcation Note

Size

HAD854X family series op amps are unity-gain stable and suitable for a wide range of general-purpose applications. Thesmall footprints of the HAD854X family packages save space on printed circuit boards and enable the design of smaller electronic products.

Power Supply Bypassing and Board Layout

HAD854X family series operates from a single 2.2V to 5.5V supply or dual ±1.0V to ±3V supplies.For best performance, a0.1μF ceramic capacitor should be placed close to the V_{DD} pin in single supply operation. For dual supply operation, both V_{DD} and V_{SS} supplies should be bypassed to ground with separate 0.1μF ceramic capacitors.

Low Supply Current

The low supply current (typical 85μA per channel) of HAD854X family will help to maximize battery life. They are ideal for battery powered systems.

Operating Voltage

HAD854X family operates under wide input supply voltage (2.2V to5.5V).In addition, all temperature specification apply from -40°C to +125°C.Most behavior remains unchanged throughout the full operating voltage range. These guarantees ensure operation throughout the single Li-Ion battery lifetime.

Rail-to-Rail Input

The input common-mode range of HAD854X family extends 100mV beyond the supply rails (V_{SS}-0.1V to V_{DD}+0.1V). This is achieved by using complementary input stage. For normal operation, inputs should be limited to this range.

Rail-to-Rail Output

Rail-to-Rail output swing provides maximum possible dynamic range at the output. This is particularly important when operating in low supply voltages. The output voltage of HAD854X family can typically swing to less than 10mV from supply rail in light resistive loads (>100kΩ), and 60mV of supply rail in moderate resistive loads (10kΩ).

Capacitive Load Tolerance

The HAD854X family is optimized for bandwidth and speed, not for driving capacitive loads. Output capacitance will create a pole in the amplifier's feedback path, leading to excessive peaking and potential oscillation. If dealing with load capacitance is a requirement of the application, the two strategies to consider are (1) using a small resistor in series with the amplifier's output and the load capacitance and (2) reducing the bandwidth of the amplifier's feedback loop by increasing the overall noise gain.Figure 2 shows a unity gain follower using the series resistor strategy. The resistor is olates the output from the capacitance and, more importantly, creates a zero in the feedback path that compensates for the pole created by the output capacitance.

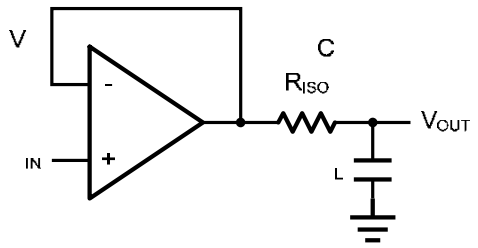

Figure 2 Indirectly Driving a Capacitive Load Using Isolation Resistor

The bigger the R_{ISO} resistor value, the more stable V_{OUT} will be. However, if there is a resistive load R_L in parallel with the capacitive load, a voltage divider (proportional to R_{ISO}/R_L) is formed, this will result in a gain error.

The circuit in Figure 3 is an improvement to the one in Figure 2. R_F provides the DC accuracy by feed-forward the V_{IN} to R_L. C_F and R_{ISO} serve to counteract the loss of phase margin by feeding the high frequency component of the output signal back to the amplifier's inverting input, thereby preserving the phase margin in the overall feedback loop. Capacitive drive can be increased by increasing the value of C_F. This in turn will slow down the pulse response.

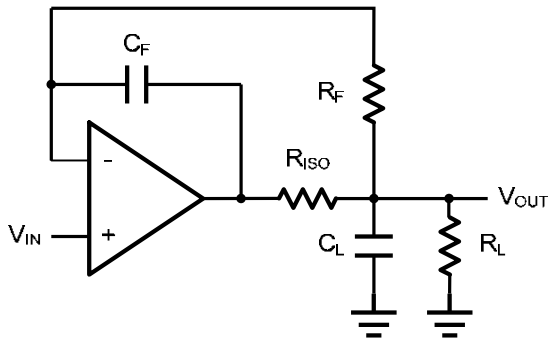

Figure 3. Indirectly Driving a Capacitive Load with DC Accuracy

Intrumenta Amplifier

The triple HAD854x family can be used to build a three-op-amp instrumentation amplifier as shown in Figure 4. The amplifier in Figure 4 is a high input impedance differential amplifier with gain of R_2/R_1. The two differential voltage followers assure the high input impedance of the amplifier.

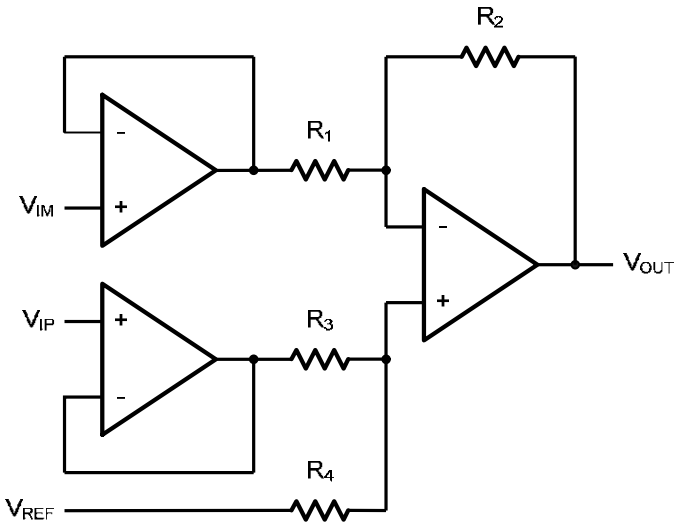

Figure 4. Instrument Amplifier

Typical Appilcation Circuits

Differential amplifier

The differential amplifier allows the subtraction of two input voltages or cancellation of a signal common the two inputs. It is useful as a computational amplifier in making a differential to single-end conversion or in rejecting a common mode signal. Figure 5.shown the differential amplifier using HAD854X family.

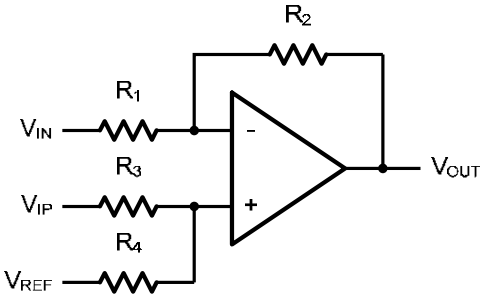

Figure 5. Differential Amplifier

$$V_{OUT}=\left(\frac{R_1+R_2}{R_3+R_4}\right)\frac{R_4}{R_1}V_{IN}-\frac{R_2}{R_1}V_{IP}+\left(\frac{R_1+R_2}{R_3+R_4}\right)\frac{R_3}{R_1}V_{REF}$$

If the resistor ratios are equal (i.e. R_1=R_3 and R_2=R_4), then

$$V_{OUT}=\frac{R_2}{R_1}(V_{IP}-V_{IN})+V_{REF}$$

Low Pass Active Filter

The low pass active filter is shown in Figure 6. The DC gain is defined by $-R_2/R_1$. The filter has a -20dB/decade roll-off after its corner frequency $f_C=1/(2\pi R_3C_1)$.

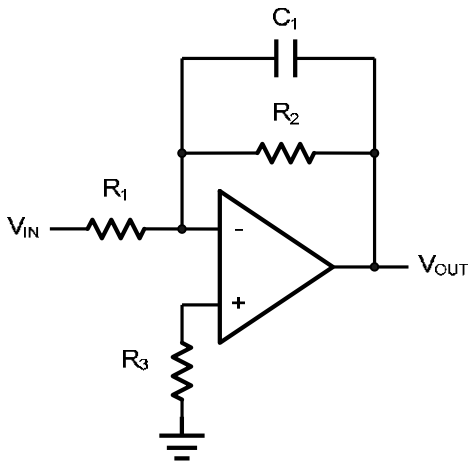

Figure 6. Low Pass Active Filter

Package Outline Dimensions

MSOP-8

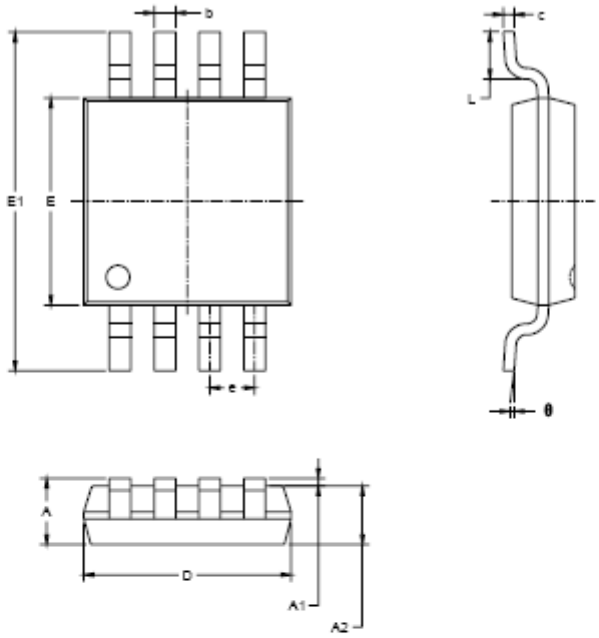

Symbol	Dimensions In Millimeters		Dimensions In Inches	
	MIN	MAX	MIN	MAX
A	0.820	1.100	0.032	0.043
A1	0.020	0.150	0.001	0.006
A2	0.750	0.950	0.030	0.037
b	0.250	0.380	0.010	0.015
c	0.090	0.230	0.004	0.009
D	2.900	3.100	0.114	0.122
E	2.900	3.100	0.114	0.122
E1	4.750	5.050	0.187	0.199
e	0.650 BSC		0.026 BSC	
L	0.400	0.800	0.016	0.031
θ	0°	6°	0°	6°

SOP-8

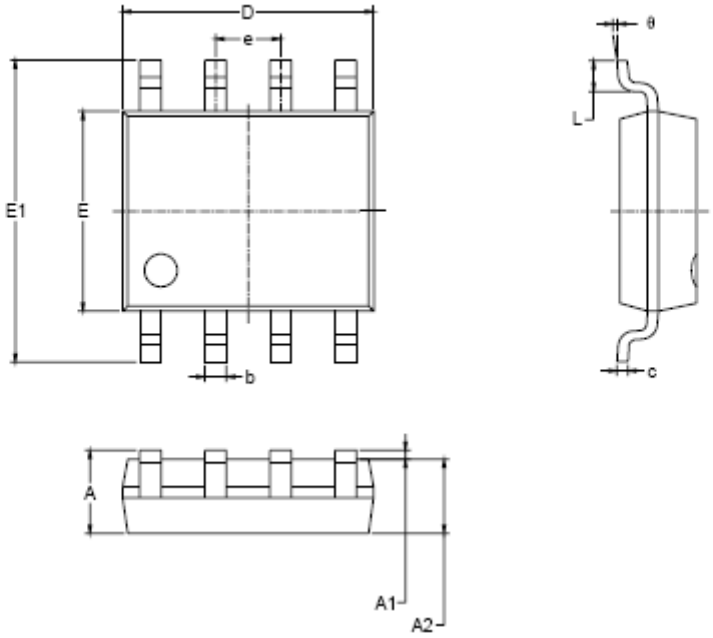

Symbol	Dimensions In Millimeters		Dimensions In Inches	
	MIN	MAX	MIN	MAX
A	1.350	1.750	0.053	0.069
A1	0.100	0.250	0.004	0.010
A2	1.350	1.550	0.053	0.061
b	0.330	0.510	0.013	0.020
c	0.170	0.250	0.006	0.010
D	4.700	5.100	0.185	0.200
E	3.800	4.000	0.150	0.157
E1	5.800	6.200	0.228	0.244
e	1.27 BSC		0.050 BSC	
L	0.400	1.270	0.016	0.050
θ	0°	8°	0°	8°

SOT-23-5L

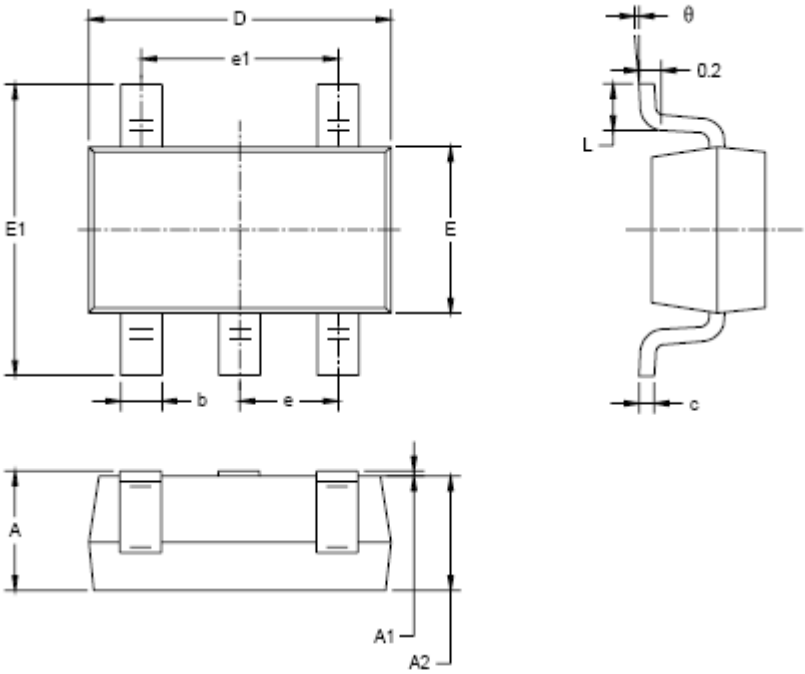

Symbol	Dimensions In Millimeters		Dimensions In Inches	
	MIN	MAX	MIN	MAX
A	1.050	1.250	0.041	0.049
A1	0.000	0.100	0.000	0.004
A2	1.050	1.150	0.041	0.045
b	0.300	0.500	0.012	0.020
c	0.100	0.200	0.004	0.008
D	2.820	3.020	0.111	0.119
E	1.500	1.700	0.059	0.067
E1	2.650	2.950	0.104	0.116
e	0.950 BSC		0.037 BSC	
e1	1.900 BSC		0.075 BSC	
L	0.300	0.600	0.012	0.024
θ	0°	8°	0°	8°

SOT-353

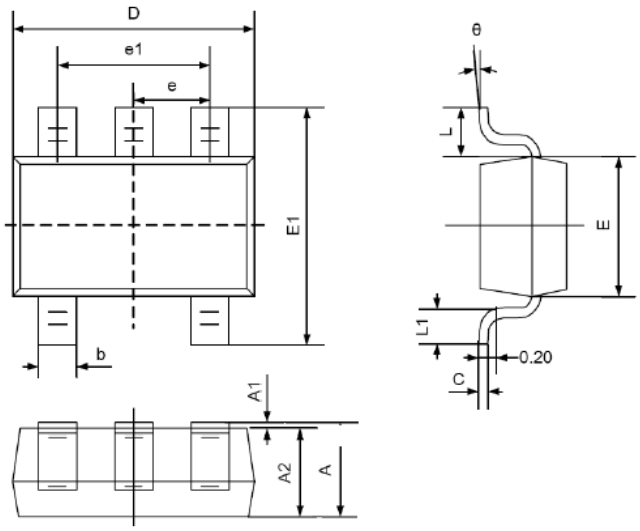

Symbol	Dimensions In Millimeters		Dimensions In Inches	
	Min	Max	Min	Max
A	0.900	1.100	0.035	0.043
A1	0.000	0.100	0.000	0.004
A2	0.900	1.000	0.035	0.039
b	0.150	0.350	0.006	0.014
C	0.080	0.150	0.003	0.006
D	2.000	2.200	0.079	0.087
E	1.150	1.350	0.045	0.053
E1	2.150	2.450	0.085	0.096
e	0.650TYP		0.026TYP	
e1	1.200	1.400	0.047	0.055
L	0.525REF		0.021REF	
L1	0.260	0.460	0.010	0.018
θ	0°	8°	0°	8°

SOP-14

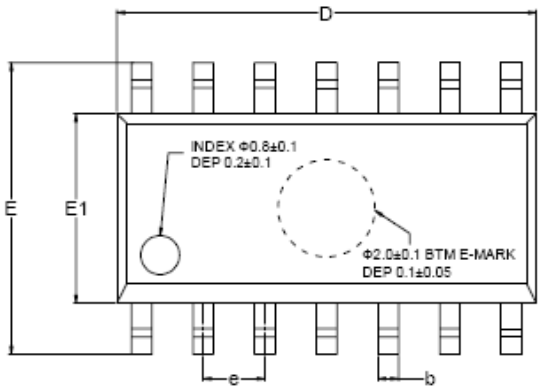

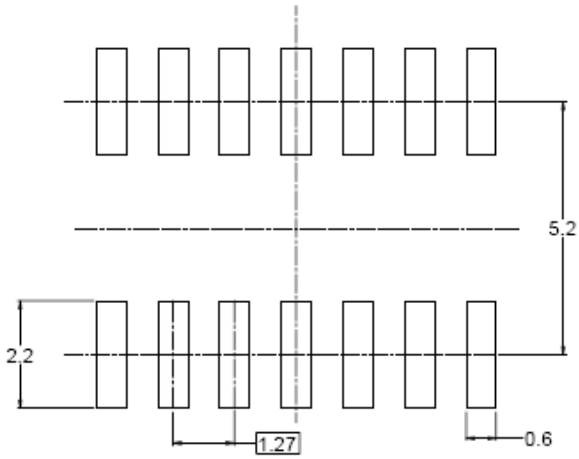

RECOMMENDED LAND PATTERN (Unit: mm)

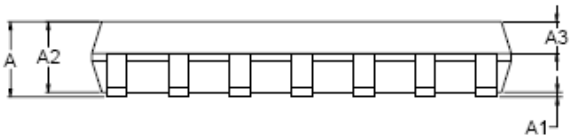

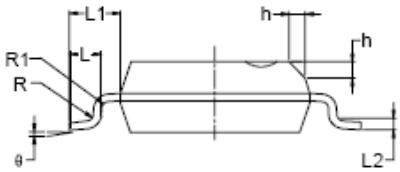

Symbol	Dimensions In Millimeters			Dimensions In Inches		
	MIN	MOD	MAX	MIN	MOD	MAX
A	1.35		1.75	0.053		0.069
A1	0.10		0.25	0.004		0.010
A2	1.25		1.65	0.049		0.065
A3	0.55		0.75	0.022		0.030
b	0.36		0.49	0.014		0.019
D	8.53		8.73	0.336		0.344
E	5.80		6.20	0.228		0.244
E1	3.80		4.00	0.150		0.157
e	1.27 BSC			0.050 BSC		
L	0.45		0.80	0.018		0.032
L1	1.04 REF			0.040 REF		
L2	0.25 BSC			0.01 BSC		
R	0.07			0.003		
R1	0.07			0.003		
h	0.30		0.50	0.012		0.020
θ	0°		8°	0°		8°

Attention

■ Any and all HUA XUAN YANG ELECTRONICS products described or contained herein do not have specifications that can handle applications that require extremely high levels of reliability, such as life-support systems, aircraft's control systems, or other applications whose failure can be reasonably expected to result in serious physical and/or material damage. Consult with your HUA XUAN YANG ELECTRONICS representative nearest you before using any HUA XUAN YANG ELECTRONICS products described or contained herein in such applications.

■ HUA XUAN YANG ELECTRONICS assumes no responsibility for equipment failures that result from using products at values that exceed, even momentarily, rated values (such as maximum ratings, operating condition ranges, or other parameters) listed in products specifications of any and all HUA XUAN YANG ELECTRONICS products described or contained herein.

■ Specifications of any and all HUA XUAN YANG ELECTRONICS products described or contained herein stipulate the performance, characteristics, and functions of the described products in the independent state, and are not guarantees of the performance, characteristics, and functions of the described products as mounted in the customer's products or equipment. To verify symptoms and states that cannot be evaluated in an independent device, the customer should always evaluate and test devices mounted in the customer's products or equipment.

■ HUA XUAN YANG ELECTRONICS CO.,LTD. strives to supply high-quality high-reliability products. However, any and all semiconductor products fail with some probability. It is possible that these probabilistic failures could
give rise to accidents or events that could endanger human lives, that could give rise to smoke or fire, or that could cause damage to other property. When designing equipment, adopt safety measures so that these kinds of accidents or events cannot occur. Such measures include but are not limited to protective circuits and error prevention circuits for safe design, redundant design, and structural design.

■ In the event that any or all HUA XUAN YANG ELECTRONICS products(including technical data, services) described or contained herein are controlled under any of applicable local export control laws and regulations, such products must not be exported without obtaining the export license from the authorities concerned in accordance with the above law.

■ No part of this publication may be reproduced or transmitted in any form or by any means, electronic or mechanical, including photocopying and recording, or any information storage or retrieval system, or otherwise, without the prior written permission of HUA XUAN YANG ELECTRONICS CO.,LTD.

■ Information (including circuit diagrams and circuit parameters) herein is for example only ; it is not guaranteed for volume production. HUA XUAN YANG ELECTRONICS believes information herein is accurate and reliable, but no guarantees are made or implied regarding its use or any infringements of intellectual property rights or other rights of third parties.

■ Any and all information described or contained herein are subject to change without notice due to product/technology improvement, etc. When designing equipment, refer to the "Delivery Specification" for the HUA XUAN YANG ELECTRONICS product that you intend to use.