Product Description

The HMCP603x family of single-, dual-, and quad- channel amplifiers features a maximized ratio of gain bandwidth(GBW) to supply current and is ideal for battery-powered applications such as portable instrumentations, portable medical equipments, wearable fitness devices, and wireless remote sensors. Featuring rail-to-rail input and output swings, 15-kHz bandwidth of combined with ultra-low supply current (typical 600 nA at 5.0 V per amplifier) and low noise (6.3 μV_{P-P} at 0.1 to 10 Hz) , the HMCP603x family is an excellent choice for precision, cost-optimized, “Always ON” sensing applications.

The robust design of the HMCP603x amplifiers provides ease-of-use to the circuit designer: integrated RF/EMI rejection filter, no phase reversal in overdrive conditions, and high electro-static discharge (ESD)protection (5-kV HBM). The HMCP603x amplifiers are optimized for operation at voltages as low as +1.7 V(±0.85 V) and up to +5.5 V (±2.75 V) over the extended temperature range of −40 ℃ to +85 ℃.

The HMCP6031 (single) is available in both SOT-23-5L package. The HMCP6032 (dual) is offered in SOP-8 and MSOP-8 packages. The quad-channel HMCP6034 is offered in both SOP-14 package.

Features

- Ultra-Low Power Preserves Battery Life
  - 600 nA Supply Current (Typically at 5 V) Per Amplifier
- Single 1.7 V to 5.5 V Supply Voltage Range
  - Can be Powered From the Same 1.8V/2.5V/3.3V/5V System Rails
- 15 kHz GBW
- Precision Specifications for Buffer/Filter/Gain Stages
  - Low Input Offset Voltage: 0.6 mV
  - Low Noise: 6.3 μV_{P-P} at 0.1 to 10 Hz
  - 5 pA Input Bias Current
  - Rail-to-Rail Input and Output
- Extended Temperature Range: −40℃ to +85℃

Applications

- Battery-Powered Instruments:
  Consumer, Industrial, Medical, Notebooks
- Wearable Fitness Devices

  Sensor Signal Conditioning:
  - Sensor Interfaces, Loop-Powered, Active Filters

  Wireless Sensors:
  - Home Security, Remote Sensing, Wireless Metering

Pin Configurations

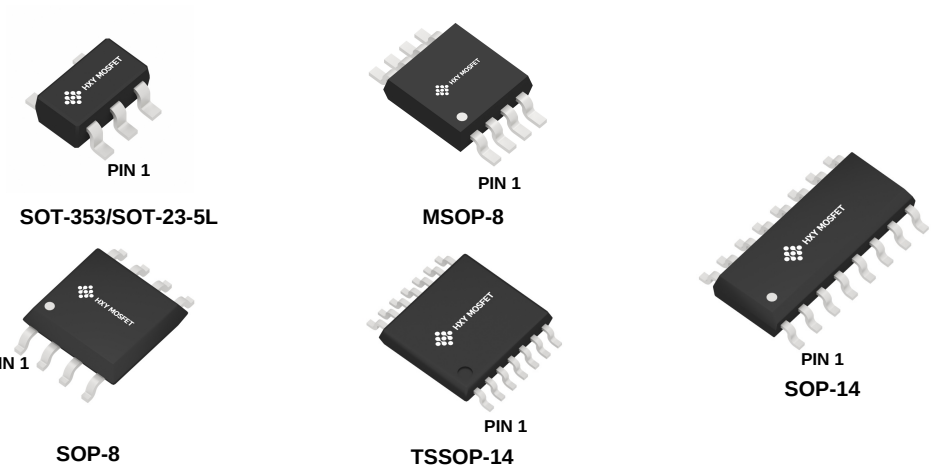

HMCP6031
SOT-23-5L

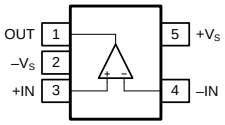

HMCP6032
SOP-8/MSOP-8

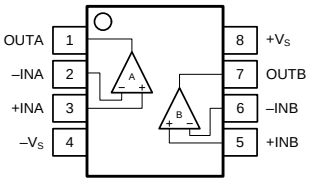

HMCP6034
SO-14 / TSSOP-14

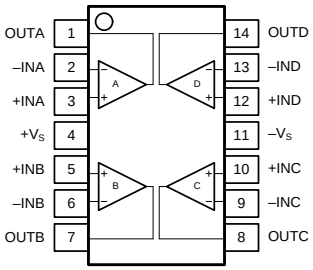

Pin Description

Symbol	Description
–IN	Inverting input of the amplifier.
+IN	Non-inverting input of the amplifier.
$+V_S$	Positive power supply.
$–V_S$	Negative power supply.
OUT	Amplifier output.

Ordering Information

Type Number	Package Name	Package Quantity
HMCP6031T-E/OT	SOT-23-5L	Tape and Reel, 3 000
HMCP6032T-I/SN	SOP-8	Tape and Reel, 3 000
HMCP6034T-I/SL	SOP-14	Tape and Reel, 2 500
HMCP6034T-I/ST	TSSOP-14	Tape and Reel, 3 000

Limiting Value

In accordance with the Absolute Maximum Rating System (IEC 60134).

Parameter	Absolute Maximum Rating
Supply Voltage, V_{S+} to $V_{S–}$	8.0 V
Signal Input Terminals: Voltage, Current	$V_{S–}$ – 0.5 V to V_{S+} + 0.5 V, ±10 mA
Output Short-Circuit	Continuous
Storage Temperature Range, T_{stg}	–65 ℃ to +150 ℃
Junction Temperature, T_J	150 ℃
Lead Temperature Range (Soldering 10 sec)	260 ℃

ESD Rating

Parameter	Item	Value	Unit
Electrostatic Discharge Voltage	Human body model (HBM), per MIL-STD-883J / Method 3015.9 (1)	±5 000	V
	Charged device model (CDM), per ESDA/JEDEC JS-002-2014 (2)	±2 000	
	Machine model (MM), per JESD22-A115C	±250	

(1) JEDEC document JEP155 states that 500-V HBM allows safe manufacturing with a standard ESD control process. Manufacturing with less than 500-V HBM is possible if necessary precautions are taken.

(2) JEDEC document JEP157 states that 250-V CDM allows safe manufacturing with a standard ESD control process. Manufacturing with less than 250-V CDM is possible if necessary precautions are taken.

ElectricalCharacteristics

V_S = 5.0V, T_A = +25℃, V_{CM} = V_S/2, V_O = V_S/2, and R_L = 10kΩ connected to V_S/2, unless otherwise noted.
Boldface limits apply over the specified temperature range, T_A = −40 to +85 ℃.

Symbol	Parameter	Conditions	Min.	Typ.	Max.	Unit
OFFSET VOLTAGE						
V_{OS}	Input offset voltage			±0.6	±3.0	mV
V_{OS} TC	Offset voltage drift	T_A = −40 to +125 ℃		**±1**	**±3**	**μ**V/℃
PSRR	Power supply rejection ratio	V_S = 1.7 to 5.5 V, V_{CM} < V_{S+} − 2V	76	92		dB
		T_A = −40 to +125 ℃	**72**			
INPUT BIAS CURRENT						
I_B	Input bias current			5	50	pA
		T_A = -40 to 85 ℃			200	
I_{OS}	Input offset current			10	50	pA
NOISE						
V_n	Input voltage noise	f = 0.1 to 10 Hz		6.3		$μV_{P-P}$
e_n	Input voltage noise density	f = 1 kHz		177		nV/√Hz
		f = 100 Hz		183		
I_n	Input current noise density	f = 1 kHz		10		fA/√Hz
INPUT VOLTAGE						
V_{CM}	Common-mode voltage range		V_{S-}–0.1		V_{S+}+0.1	V
CMRR	Common-mode rejection ratio	V_S = 5.5 V, V_{CM} = −0.1 to 5.6 V	67	84		dB
		V_{CM} = 0 to 5.3 V, T_A = −40 to +125 ℃	**64**			
		V_S = 1.8 V,V_{CM} = −0.1 to 1.8 V	65	79		
		V_{CM} = 0 to 1.8 V, T_A = −40 to +125 ℃	**62**			
INPUT IMPEDANCE						
R_{IN}	Input resistance		100			GΩ
C_{IN}	Input capacitance	Differential		2.0		pF
		Common mode		3.5		
OPEN-LOOP GAIN						
A_{VOL}	Open-loop voltage gain	R_L = 10 kΩ, V_O = 0.05 to 3.5 V	76	93		dB
		T_A = −40 to +125 ℃	**72**			
		R_L = 600 Ω, V_O = 0.15 to 3.5 V	69	84		
		T_A = −40 to +125 ℃	**65**			
FREQUENCY RESPONSE						
GBW	Gain bandwidth product			15		kHz
SR	Slew rate	G = +1, C_L = 100 pF, V_O = 1.5 to 3.5 V		5		V/μs
THD+N	Total harmonic distortion + noise	G = +1, f = 1 kHz, V_O = 0.5 V_{RMS}		0.0005		%
t_S	Settling time	To 0.1%, G = +1, 1V step		0.26		μs
		To 0.01%, G = +1, 1V step		0.34		
t_{OR}	Overload recovery time	V_{IN} * Gain > V_S		0.3		μs

Symbol	Parameter	Conditions	Min.	Typ.	Max.	Unit
OUTPUT						
V_{OH}	High output voltage swing	R_L = 50 kΩ	V_{S+}–7	V_{S+}–20		mV
		R_L = 2 kΩ	V_{S+}–175	V_{S+}–220		
V_{OL}	Low output voltage swing	R_L = 50 kΩ		5	15	mV
		R_L = 2 kΩ		115	150	
I_{SC}	Short-circuit current			36		mA
POWER SUPPLY						
V_S	Operating supply voltage	T_A = −40 to +5 ℃	**1.7**		**5.5**	V
I_Q	Quiescent current (per amplifier)	V_S = 1.8 V		450	650	μA
		V_S = 5.0 V		750	880	
THERMAL CHARACTERISTICS						
T_A	Operating temperature range		–40		+125	℃
θ_{JA}	Package Thermal Resistance	SOT-23-5L		190		℃/W
		SOP-8		125		
		TSSOP-14		112		
		SOP-14		115		

TypicalPerformanceCharacteristics

At T_A = +25℃, V_{CM} = V_S/2, and R_L = 10kΩ connected to V_S/2, unless otherwise noted.

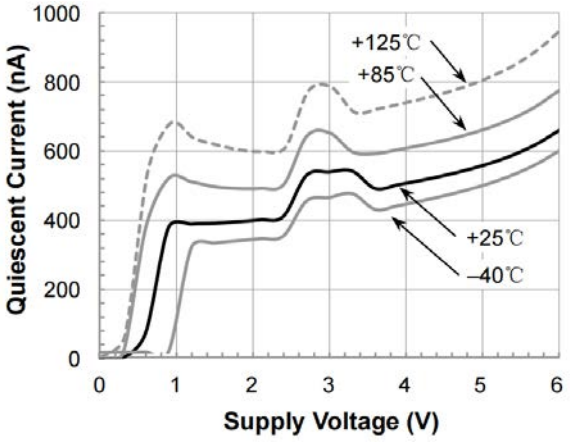

Quiescent Current as a function of Supply Voltage.

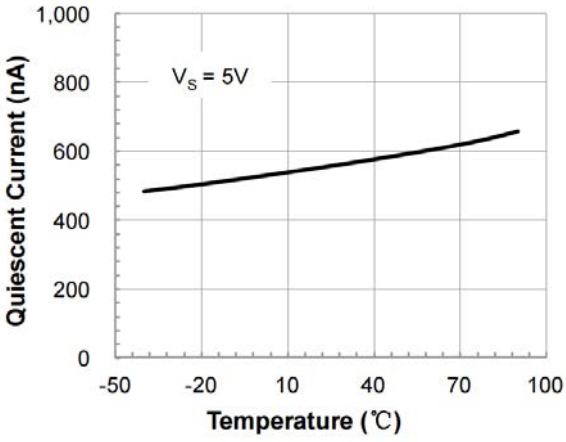

Quiescent Current as a function of Temperature.

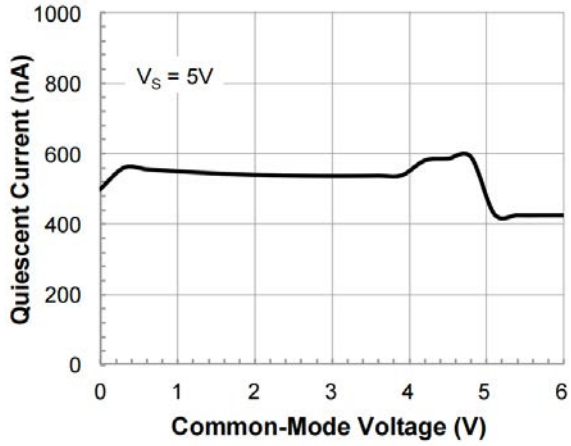

Quiescent Current as a function of Input Common-Mode Voltage.

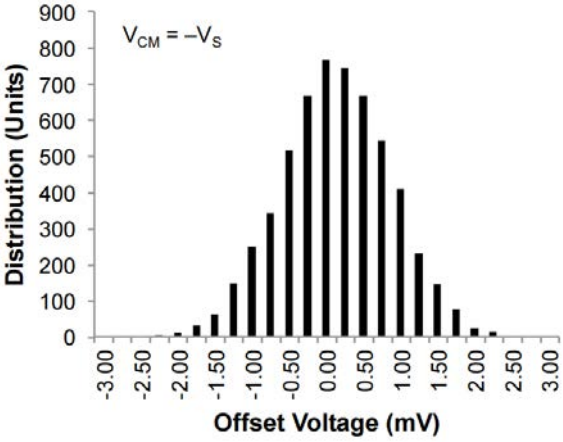

Offset Voltage Production Distribution

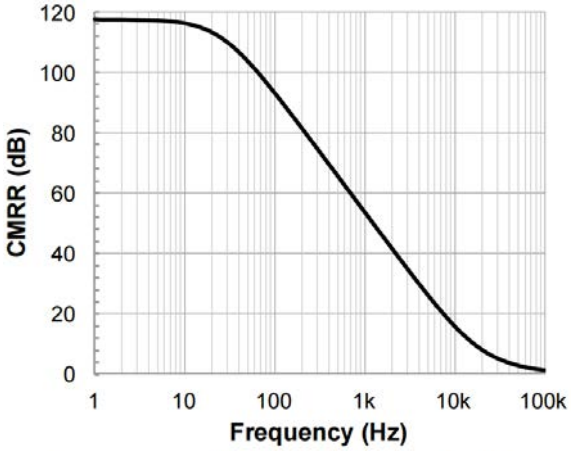

Common-mode Rejection Ratio as a function of Frequency.

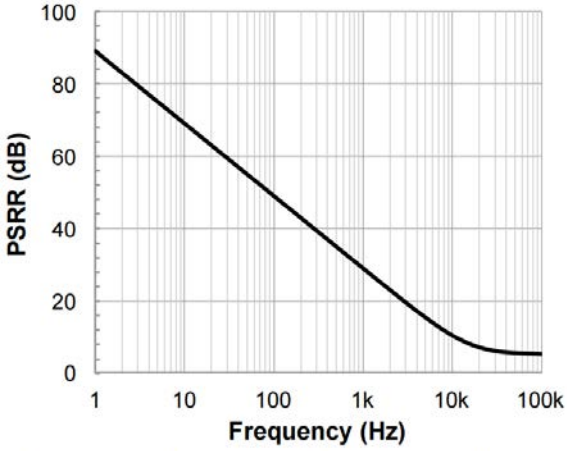

Power Supply Rejection Ratio as a function of Frequency.

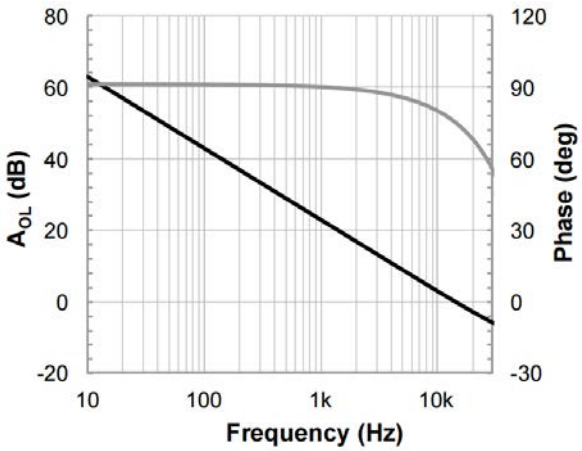

Open-loop Gain and Phase as a function of Frequency.

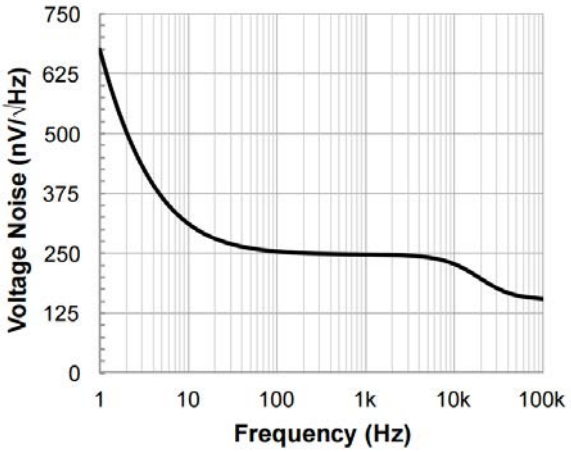

Input Voltage Noise Spectral Density as a function of Frequency.

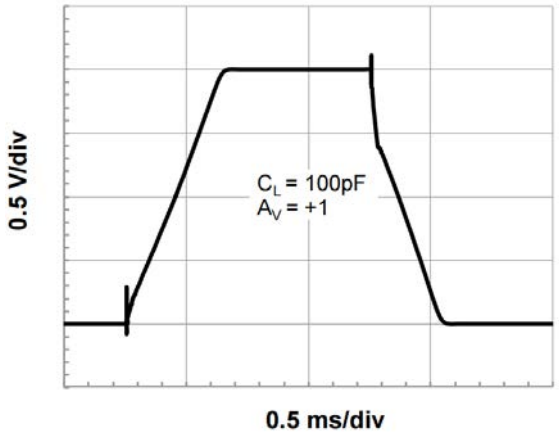

Large Signal Step Response (2V Step).

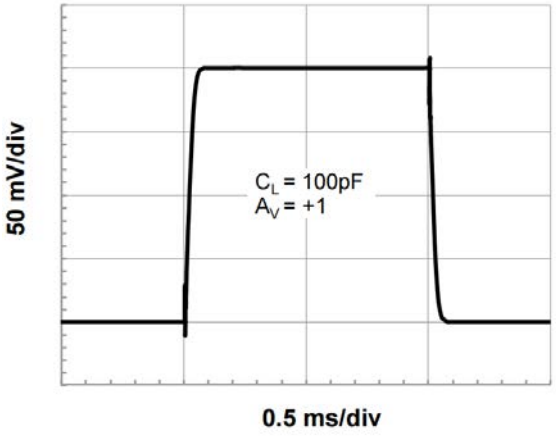

Small Signal Step Response (200mV Step).

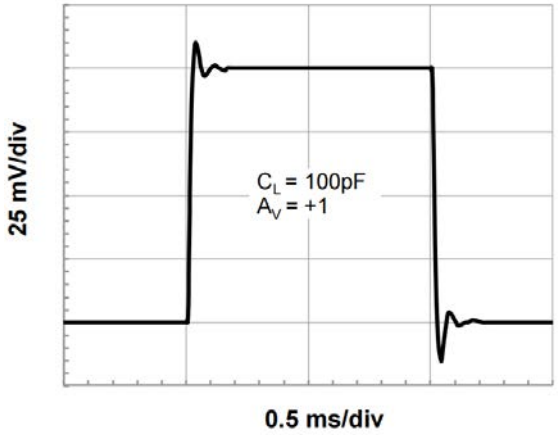

Small Signal Step Response (100mV Step).

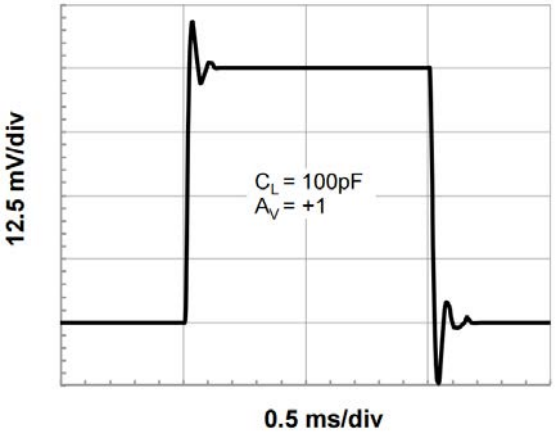

Small Signal Step Response (50mV Step).

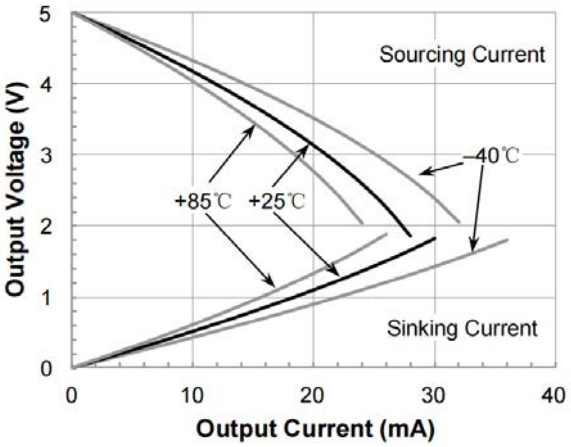

Output Voltage Swing as a function of Output Current.

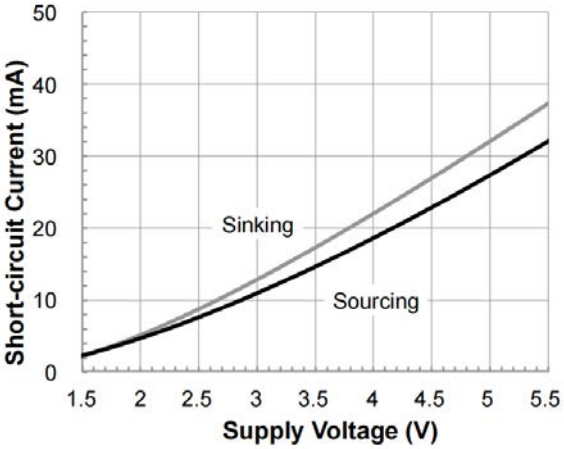

Short-circuit Current as a function of Supply Voltage.

ApplicationNotes

Featuring a maximized ratio of GBW-to-supply current, low operating supply voltage, low input bias current, and rail-to-rail inputs and outputs, the HMCP603x famiy is an excellent choice for precision or general-purpose, low-current, low-voltage, battery-powered applications. These CMOS operational amplifiers consume an ultra-low 600-nA (typically at 5-V supply voltage) supply current per amplifier. The HMCP603x family is unity-gain stable with a 15-kHz GBW product, driving capacitive loads up to 500-pF.

OPERATING VOLTAGE

The HMCP603x family is fully specified and ensured for operation at voltages as low as +1.7 V (±0.85 V) and up to +5.5 V (±2.75 V). In addition, many specifications apply from –40 ℃ to +85 ℃. Parameters that vary significantly with operating voltages or temperature are illustrated in the Typical Characteristics graphs.

RAIL-TO-RAIL INPUT

The input common-mode voltage range of the HMCP603x series extends 100-mV beyond the negative and positive supply rails. This performance is achieved with a complementary input stage: an N-channel input differential pair in parallel with a P-channel differential pair. The N-channel pair is active for input voltages close to the positive rail, typically V_{S+}–1.4 V to the positive supply, whereas the P-channel pair is active for inputs from 100-mV below the negative supply to approximately V_{S+}–1.4 V. There is a small transition region, typically V_{S+}–1.2 V to V_{S+}–1 V, in which both pairs are on. This 200-mV transition region can vary up to 200-mV with process variation. Thus, the transition region (both stages on) can range from V_{S+}–1.4 V to V_{S+}–1.2 V on the low end, up to V_{S+}–1 V to V_{S+}–0.8 V on the high end. Within this transition region, PSRR, CMRR, offset voltage, offset drift, and THD can be degraded compared to device operation outside this region.

The typical input bias current of the HMCP603x during normal operation is approximately 5-pA. In overdriven conditions, the bias current can increase significantly.

The most common cause of an overdriven condition occurs when the operational amplifier is outside of the linear range of operation. When the output of the operational amplifier is driven to one of the supply rails, the feedback loop requirements cannot be satisfied and a differential input voltage develops across the input pins. This differential input voltage results in activation of parasitic diodes inside the front-end input chopping switches that combine with electromagnetic interference (EMI) filter resistors to create the equivalent circuit. Notice that the input bias current remains within specification in the linear region.

INPUT EMI FILTER AND CLAMP CIRCUIT

Figure 1 shows the input EMI filter and clamp circuit. The MCP603x op-amps have internal ESD protection diodes (D1, D2, D3, and D4) that are connected between the inputs and each supply rail. These diodes protect the input transistors in the event of electrostatic discharge and are reverse biased during normal operation. This protection scheme allows voltages as high as approximately 500-mV beyond the rails to be applied at the input of either terminal without causing permanent damage. These ESD protection current-steering diodes also provide in-circuit, input overdrive protection, as long as the current is limited to 20-mA as stated in the Absolute Maximum Ratings.

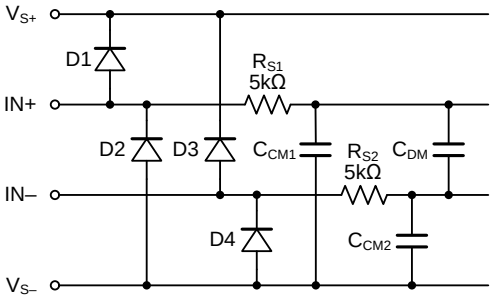

Figure 1. Input EMI Filter and Clamp Circuit

Operational amplifiers vary in susceptibility to EMI. If conducted EMI enters the operational amplifier, the dc offset at the amplifier output can shift from its nominal value when EMI is present. This shift is a result of signal rectification associated with the internal semiconductor junctions. Although all operational amplifier pin functions can be affected by EMI, the input pins are likely to be the most susceptible. The EMI filter of the HMCP603x family is composed of two 5-kΩ input series resistors (R_{S1} and R_{S2}), two common-mode capacitors (C_{CM1} and C_{CM2}), and a differential capacitor (C_{DM}). These RC networks set the −3 dB low-pass cutoff frequencies at 35-MHz for common-mode signals, and at 22-MHz for differential signals.

RAIL-TO-RAIL OUTPUT

Designed as a micro-power, low-noise operational amplifier, the HMCP603x delivers a robust output drive capability. A class AB output stage with common-source transistors is used to achieve full rail-to-rail output swing capability. For resistive loads up to 100-kΩ, the output swings typically to within 5 mV of either supply rail regardless of the power-supply voltage applied. Different load conditions change the ability of the amplifier to swing close to the rails. For resistive

loads up to 2-kΩ, the output swings typically to within 175-mV of the positive supply rail and within 115-mV of the negative supply rail.

CAPACITIVE LOAD AND STABILITY

The HMCP603x family of operational amplifiers can safely drive capacitive loads of up to 500-pF in any configuration. As with most amplifiers, driving larger capacitive loads than specified may cause excessive overshoot and ringing, or even oscillation. A heavy capacitive load reduces the phase margin and causes the amplifier frequency response to peak. Peaking corresponds to overshooting or ringing in the time domain. Therefore, it is recommended that external compensation be used if the HMCP603x family requires greater capacitive-drive capability. This compensation is particularly important in the unity-gain configuration, which is the worst case for stability.

A quick and easy way to stabilize the op-amp for capacitive load drive is by adding a series resistor, R_{ISO}, between the amplifier output terminal and the load capacitance, as shown in Figure 2. R_{ISO} isolates the amplifier output and feedback network from the capacitive load. The bigger the R_{ISO} resistor value, the more stable V_{OUT} will be. Note that this method results in a loss of gain accuracy because R_{ISO} forms a voltage divider with the R_L. In unity gain applications with relatively small R_L (approximately 5-kΩ), the capacitive load can be increased up to 100-pF.

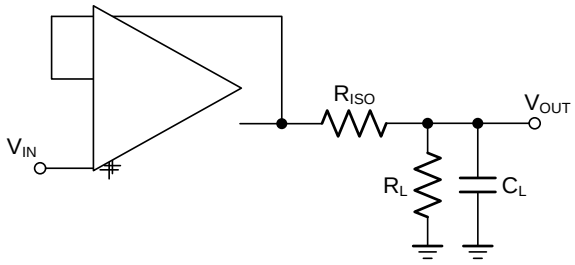

Figure 2. Indirectly Driving Heavy Capacitive Load

An improvement circuit is shown in Figure 3. It provides DC accuracy as well as AC stability. The R_F provides the DC accuracy by connecting the inverting signal with the output.

The C_F and R_{ISO} serve to counteract the loss of phase margin by feeding the high frequency component of the output signal back to the amplifier's inverting input, thereby preserving phase margin in the overall feedback loop.

For no-buffer configuration, there are two others ways to increase the phase margin: (a) by increasing the amplifier's gain, or (b) by placing a capacitor in parallel with the feedback resistor to counteract the parasitic capacitance associated with inverting node.

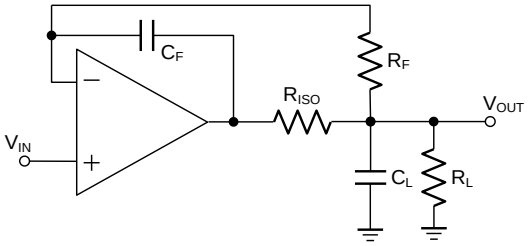

Figure 3. Indirectly Driving Heavy Capacitive Load with DC Accuracy

EMI REJECTION RATIO

Circuit performance is often adversely affected by high frequency EMI. When the signal strength is low and transmission lines are long, an op-amp must accurately amplify the input signals. However, all op-amp pins — the non-inverting input, inverting input, positive supply, negative supply, and output pins — are susceptible to EMI signals. These high frequency signals are coupled into an op-amp by various means, such as conduction, near field radiation, or far field radiation. For example, wires and printed circuit board (PCB) traces can act as antennas and pick up high frequency EMI signals.

Amplifiers do not amplify EMI or RF signals due to their relatively low bandwidth. However, due to the nonlinearities of the input devices, op-amps can rectify these out of band signals. When these high frequency signals are rectified, they appear as a dc offset at the output.

The HMCP603x op-amps have integrated EMI filters at their input stage. A mathematical method of measuring EMIRR is defined as follows:

$EMIRR = 20 \log (V_{IN_PEAK} / \Delta V_{OS})$

INPUT-TO-OUTPUT COUPLING

To minimize capacitive coupling, the input and output signal traces should not be parallel. This helps reduce unwanted positive feedback.

MAXIMIZING PERFORMANCE THROUGH PROPER LAYOUT

To achieve the maximum performance of the extremely high input impedance and low offset voltage of the HMCP603x op-amps, care is needed in laying out the circuit board. The PCB surface must remain clean and free of moisture to avoid leakage currents between adjacent traces. Surface coating of the circuit board reduces surface moisture and provides a humidity barrier, reducing parasitic resistance on the board. The use of guard rings around the amplifier inputs further reduces leakage currents. Figure 4 shows proper guard ring configu-

ration and the top view of a surface-mount layout. The guard ring does not need to be a specific width, but it should form a continuous loop around both inputs. By setting the guard ring voltage equal to the voltage at the non-inverting input, parasitic capacitance is minimized as well. For further reduction of leakage currents, components can be mounted to the PCB using Teflon standoff insulators.

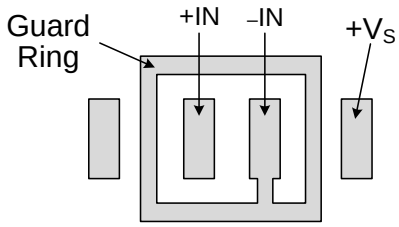

Figure 4. Use a guard ring around sensitive pins

Other potential sources of offset error are thermoelectric voltages on the circuit board. This voltage, also called Seebeck voltage, occurs at the junction of two dissimilar metals and is proportional to the temperature of the junction. The most common metallic junctions on a circuit board are solder-to-board trace and solder-to-component lead. If the temperature of the PCB at one end of the component is different from the temperature at the other end, the resulting Seebeck voltages are not equal, resulting in a thermal voltage error.

This thermocouple error can be reduced by using dummy components to match the thermoelectric error source. Placing the dummy component as close as possible to its partner ensures both Seebeck voltages are equal, thus canceling the thermocouple error. Maintaining a constant ambient temperature on the circuit board further reduces this error. The use of a ground plane helps distribute heat throughout the board and reduces EMI noise pickup.

Typical Application Circuits

DIFFERENTIAL AMPLIFIER

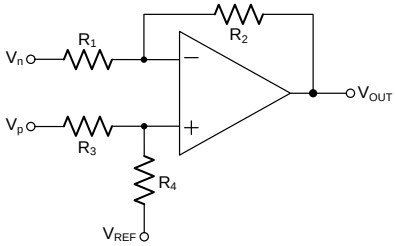

Figure 5. Differential Amplifier

The circuit shown in Figure 5 performs the difference function. If the resistors ratios are equal $R_4/R_3 = R_2/R_1$, then:

$$V_{OUT} = (V_p - V_n) \times R_2/R_1 + V_{REF}$$

INSTRUMENTATION AMPLIFIER

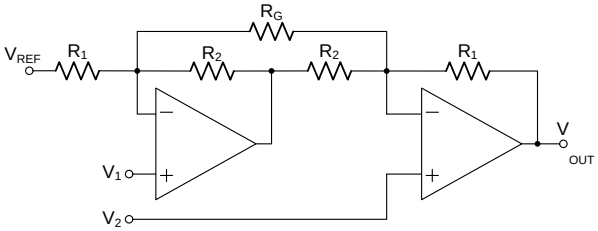

$$V_{OUT} = (V_1 - V_2)(1 + \frac{R_1}{R_2} + \frac{2R_1}{R_G}) + V_{REF}$$

Figure 6. Instrumentation Amplifier

The HMCP603x family is well suited for conditioning sensor signals in battery-powered applications. Figure 6 shows a two op-amp instrumentation amplifier,
using the HMCP603x op-amps. The circuit works well for applications requiring rejection of common-mode noise at higher gains. The reference voltage (V_{REF}) is
supplied by a low-impedance source. In single voltage supply applications, the V_{REF} is typically $V_S/2$.

BATTERY MONITORING

The low operating voltage and quiescent current of the HMCP603x family make it an excellent choice for battery monitoring applications, as shown in Figure 7.
In this circuit, V_{STATUS} is high as long as the battery voltage remains above 2-V (V_{REF} = 1.2V). A low-power reference is used to set the trip point. Resistor values are selected as follows:

1. R_F Selecting: Select R_F such that the current through R_F is approximately 1000x larger than the maximum bias current over temperature:
   $R_F = V_{REF} \div (1000 \times I_{BMAX}) = 1.2V \div (1000 \times 100pA) = 12M\Omega \approx 10M\Omega$
2. Choose the hysteresis voltage, V_{HYST}. For battery monitoring applications, 50-mV is adequate.
3. Calculate R_1 as follows:
   $R_1 = R_F \times (V_{HYST} \div V_{BATT}) \approx 10M\Omega \times (50mV \div 2.4V) = 210k\Omega$
4. Select a threshold voltage for V_{IN} rising (V_{TS}) = 2.0V.
5. Calculate R_2 as follows:
   $R_2 = 1 \div [V_{TS} \div (V_{REF} \times R_1) - 1 \div R_1 - 1 \div R_F] = 1 \div [2V \div (1.2V \times 210k\Omega) - 1 \div 210k\Omega - 1 \div 10M\Omega] = 325k\Omega$
6. Calculate R_{BIAS}: The minimum supply voltage for this circuit is 1.8V. Providing 5µA of supply current assures proper operation. Therefore:
   $R_{BIAS} = (V_{BATTMIN} - V_{REF}) \div I_{BIAS} = (1.8V - 1.2V) \div 5\mu A = 120k\Omega$

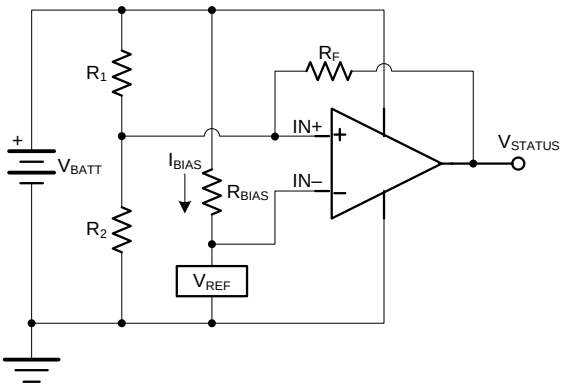

Figure 7. Battery Monitor

PORTABLE GAS METER

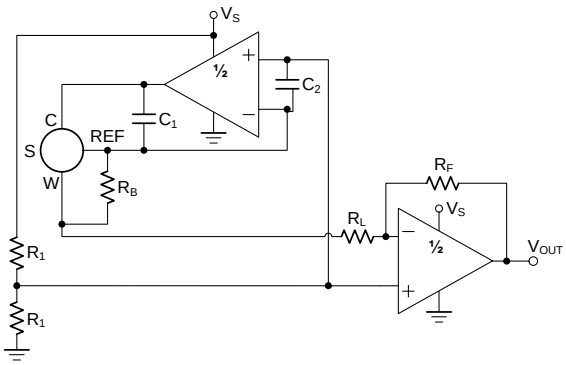

Figure 8. Portable Gas Meter Application

Package Outlines

DIMENSIONS, SOT-23-5L

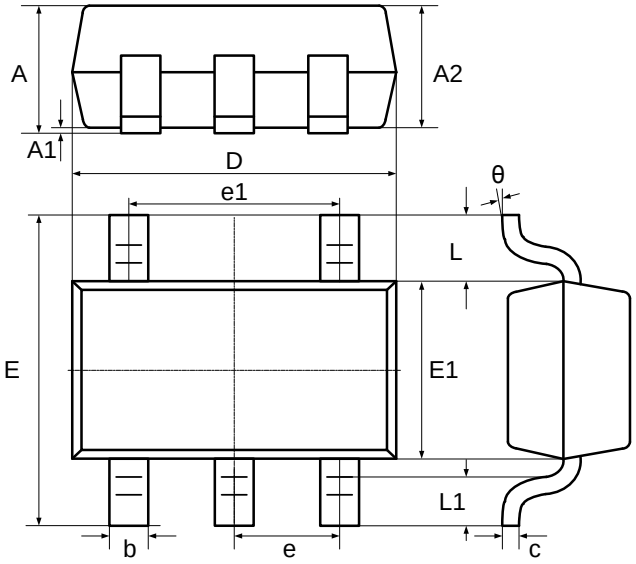

Symbol	Dimensions In Millimeters		Dimensions In Inches	
	Min	Max	Min	Max
A	-	1.25	-	0.049
A1	0.04	0.10	0.002	0.004
A2	1.00	1.20	0.039	0.047
b	0.33	0.41	0.013	0.016
c	0.15	0.19	0.006	0.007
D	2.820	3.02	0.111	0.119
E1	1.50	1.70	0.059	0.067
E	2.60	3.00	0.102	0.118
e	0.95 BSC		0.037 BSC	
e1	1.90 BSC		0.075 BSC	
L	0.60 REF		0.024 REF	
L1	0.30	0.60	0.012	0.024
θ	0°	8°	0°	8°

RECOMMENDED SOLDERING FOOTPRINT, SOT-23-5L

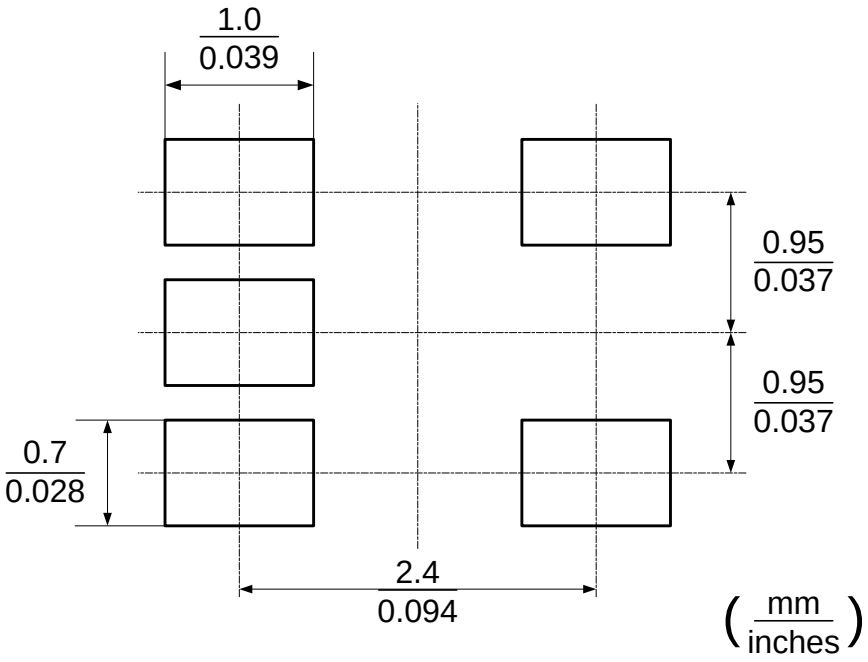

DIMENSIONS, SOP-8

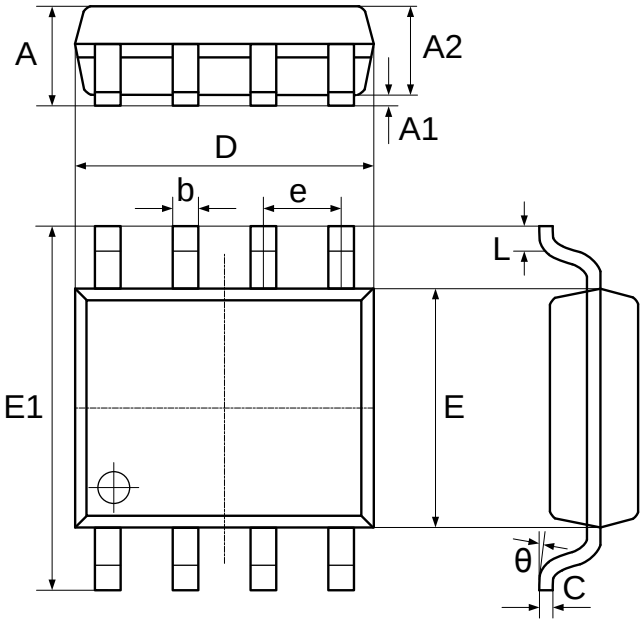

Symbol	Dimensions In Millimeters		Dimensions In Inches	
	Min	Max	Min	Max
A	1.370	1.670	0.054	0.066
A1	0.070	0.170	0.003	0.007
A2	1.300	1.500	0.051	0.059
b	0.306	0.506	0.012	0.020
C	0.203 TYP.		0.008 TYP.	
D	4.700	5.100	0.185	0.201
E	3.820	4.020	0.150	0.158
E1	5.800	6.200	0.228	0.244
e	1.270 TYP.		0.050 TYP.	
L	0.450	0.750	0.018	0.030
θ	0°	8°	0°	8°

RECOMMENDED SOLDERING FOOTPRINT, SOP-8

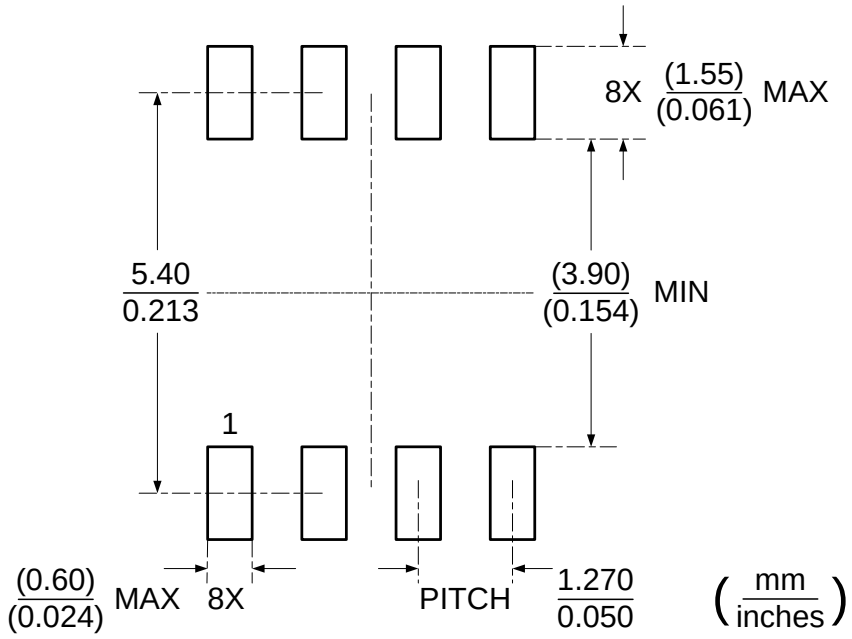

DIMENSIONS, MSOP-8

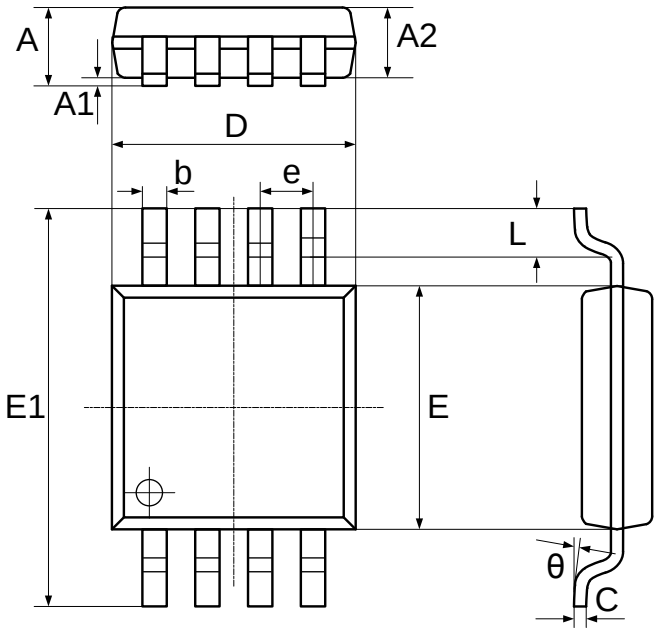

Symbol	Dimensions In Millimeters		Dimensions In Inches	
	Min	Max	Min	Max
A	0.800	1.100	0.031	0.043
A1	0.050	0.150	0.002	0.006
A2	0.750	0.950	0.030	0.037
b	0.290	0.380	0.011	0.015
C	0.150	0.200	0.006	0.008
D	2.900	3.100	0.114	0.122
E	2.900	3.100	0.114	0.122
E1	4.700	5.100	0.185	0.201
e	0.650 TYP.		0.026 TYP.	
L	0.400	0.700	0.016	0.028
θ	0°	8°	0°	8°

RECOMMENDED SOLDERING FOOTPRINT, MSOP-8

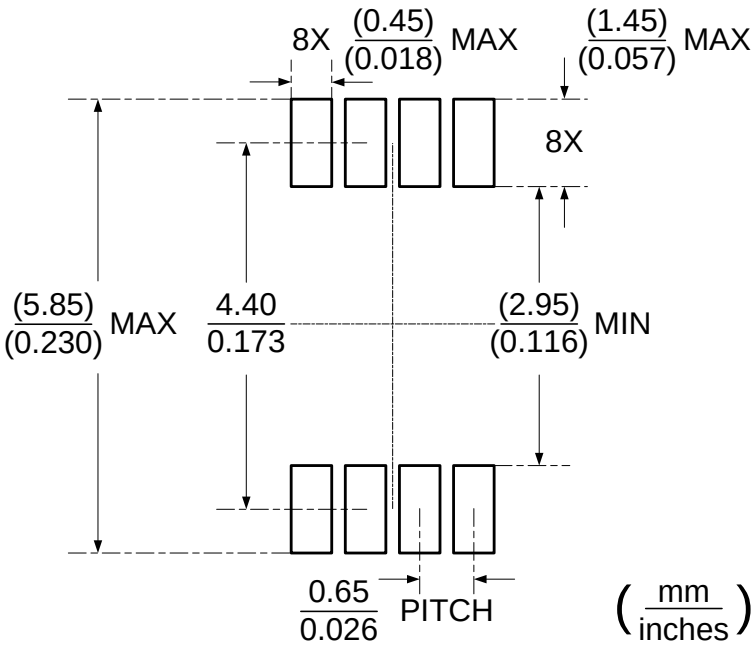

DIMENSIONS, SOP-14

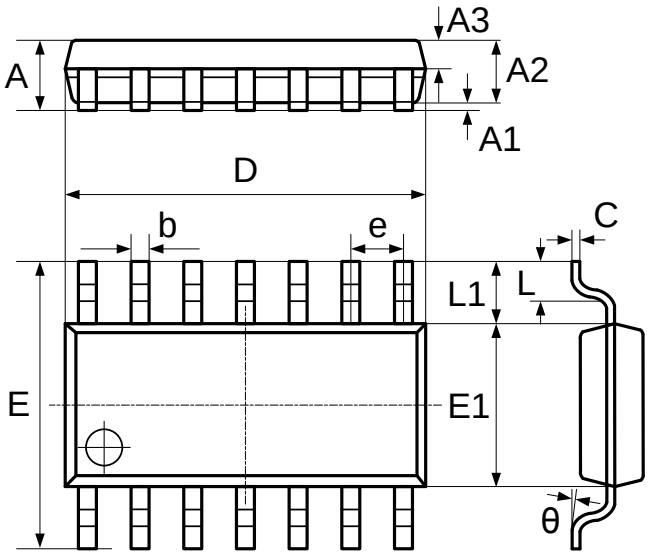

Symbol	Dimensions In Millimeters		Dimensions In Inches	
	Min	Max	Min	Max
A	1.450	1.850	0.057	0.073
A1	0.100	0.300	0.004	0.012
A2	1.350	1.550	0.053	0.061
A3	0.550	0.750	0.022	0.030
b	0.406 TYP.		0.016 TYP.	
C	0.203 TYP.		0.008 TYP.	
D	8.630	8.830	0.340	0.348
E	5.840	6.240	0.230	0.246
E1	3.850	4.050	0.152	0.159
e	1.270 TYP.		0.050 TYP.	
L1	1.040 REF.		0.041 REF.	
L	0.350	0.750	0.014	0.030
θ	2°	8°	2°	8°

RECOMMENDED SOLDERING FOOTPRINT, SOP-14

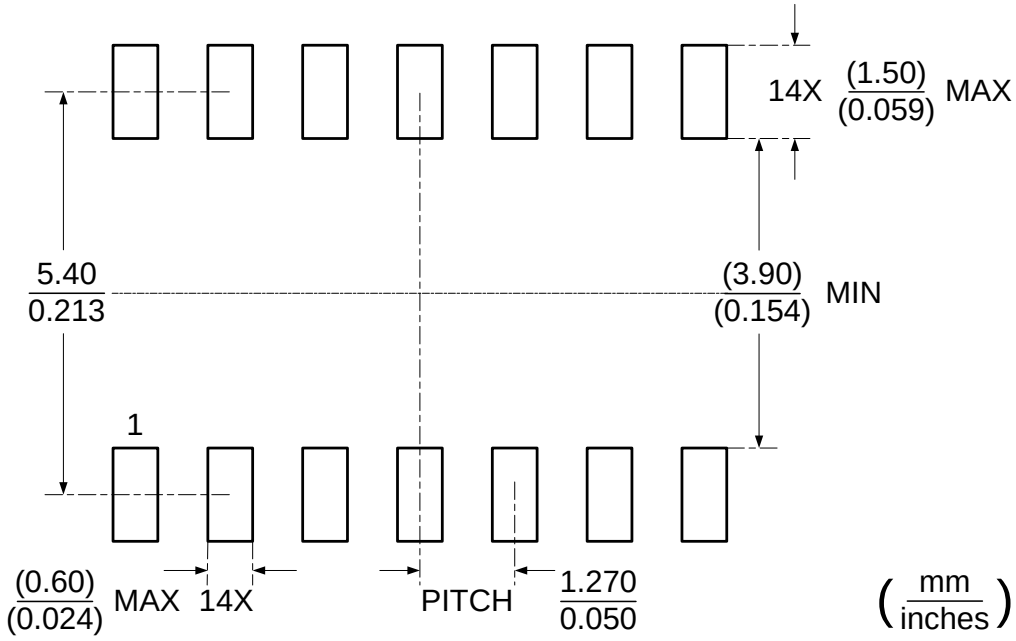

Attention

■ Any and all HUA XUAN YANG ELECTRONICS products described or contained herein do not have specifications that can handle applications that require extremely high levels of reliability, such as life-support systems, aircraft's control systems, or other applications whose failure can be reasonably expected to result in serious physical and/or material damage. Consult with your HUA XUAN YANG ELECTRONICS representative nearest you before using any HUA XUAN YANG ELECTRONICS products described or contained herein in such applications.

■ HUA XUAN YANG ELECTRONICS assumes no responsibility for equipment failures that result from using products at values that exceed, even momentarily, rated values (such as maximum ratings, operating condition ranges, or other parameters) listed in products specifications of any and all HUA XUAN YANG ELECTRONICS products described or contained herein.

■ Specifications of any and all HUA XUAN YANG ELECTRONICS products described or contained herein stipulate the performance, characteristics, and functions of the described products in the independent state, and are not guarantees of the performance, characteristics, and functions of the described products as mounted in the customer's products or equipment. To verify symptoms and states that cannot be evaluated in an independent device, the customer should always evaluate and test devices mounted in the customer's products or equipment.

■ HUA XUAN YANG ELECTRONICS CO.,LTD. strives to supply high-quality high-reliability products. However, any and all semiconductor products fail with some probability. It is possible that these probabilistic failures could
give rise to accidents or events that could endanger human lives, that could give rise to smoke or fire, or that could cause damage to other property. When designing equipment, adopt safety measures so that these kinds of accidents or events cannot occur. Such measures include but are not limited to protective circuits and error prevention circuits for safe design, redundant design, and structural design.

■ In the event that any or all HUA XUAN YANG ELECTRONICS products(including technical data, services) described or contained herein are controlled under any of applicable local export control laws and regulations, such products must not be exported without obtaining the export license from the authorities concerned in accordance with the above law.

■ No part of this publication may be reproduced or transmitted in any form or by any means, electronic or mechanical, including photocopying and recording, or any information storage or retrieval system, or otherwise, without the prior written permission of HUA XUAN YANG ELECTRONICS CO.,LTD.

■ Information (including circuit diagrams and circuit parameters) herein is for example only ; it is not guaranteed for volume production. HUA XUAN YANG ELECTRONICS believes information herein is accurate and reliable, but no guarantees are made or implied regarding its use or any infringements of intellectual property rights or other rights of third parties.

■ Any and all information described or contained herein are subject to change without notice due to product/technology improvement, etc. When designing equipment, refer to the "Delivery Specification" for the HUA XUAN YANG ELECTRONICS product that you intend to use.