AOTE SEMICONDUCTOR

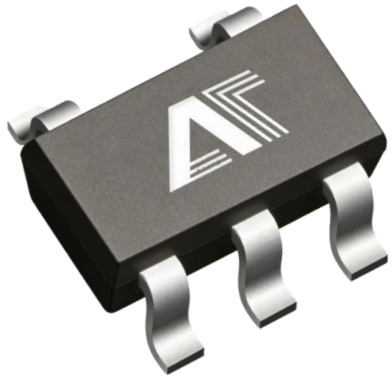

Single channel Schmitt triggered inverter

AN74AHCT1G14

Product Data Sheet

AOTE DCC
RELEASE

◆ Summary ：

AN74AHCT1G14 is a single channel Schmitt trigger inverter that can operate within a supply voltage range of 2.0V to 5.5V.

The AN74AHCT1G14 device includes an inverter and executes the Boolean function $Y=\bar{A}$ This device is used as an independent inverter with Schmitt trigger input, so it has different input threshold levels for positive (VT+) and negative(V_{T+}) signals to provide hysteresis (V_{T-}), allowing the device to tolerate slow or noisy input signals.This device can be used for Ioff local power-off applications. When the device is powered off, the Ioff circuit will disable the output to prevent backflow current from damaging the device.This device is packaged in SOT23-5. The working temperature range is -40℃~+125℃.

◆ Product features

- Small Package: SOT23-5
- Working voltage range: 2.0V~5.5V
- Low power consumption: 0.1μA (typical value)
- Working temperature range: -40℃~+125℃
- Input compatible TTL voltage
- Input voltage up to 5.5V
- Output driver: When powered by 5.0V, output driver+32mA
- Ioff supports partial power-off mode operation;

◆ Applications

- Communication receiver
- Blu ray player and home theater
- Desktop or laptop computer
- Digital Video Camera (DVC)
- mobile phone
- Personal Navigation Device (GPS)
- Portable media player

◆ Packaging and Order Description

Product Name	Order Model	Temperature Range (℃)	boxed type	screen printing	MSL(3)	Packing Specification
AN74AHCT1G14	AN74AHCT1G14DBVR	-40℃ ~+125℃	SOT23-5	B14S	MSL3	Tape and Reel, 3000

Attention:

(1) This information is the latest data for the current version. If these data are updated, they will be promptly updated on our official website without further notice.

(2) Silk screen printing may have additional codes for internal control traceability of products (including data codes and supplier codes) or marking the place of origin.

(3) MSL, Humidity sensitivity level classified according to JEDEC industry standards.

(4) equivalent SOT353

AOTE All Rights Reserved. Release Date :April 7, 2026

◆ Logic diagram

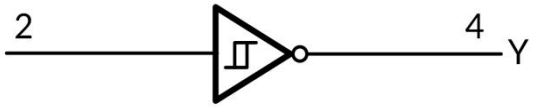

$Y=\overline{A}$

H=high level

L=low level

◆ Menu

Input	Output
A	Y
H	L
L	H

◆ on-product information:

• Footage image

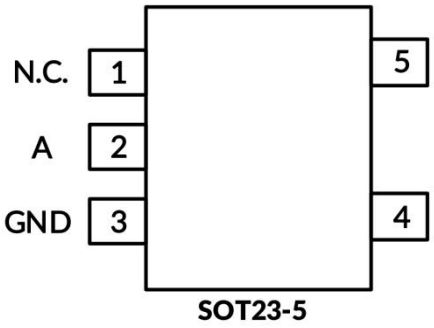

SOT23-5

Pin	Pin Name	I/O	Function Description
1	N.C.	-	No connection
2	A	I	A input
3	GND	-	grounding
4	Y	O	Y import
5	Vcc	P	Power supply

AOTE All Rights Reserved. Release Date :April 7, 2026

◆ Absolute maximum rating Within the natural ventilation temperature range (unless otherwise specified)

	Parameter		Min	Max	Unit
VCC	Power supply voltage range		-0.5	6.5	V
VI	Input voltage range		-0.5	6.5	V
Vo	The voltage range applicable to any output under high impedance or power-off conditions		-0.5	6.5	V
Vo	The voltage range applicable to any output in either high or low level state		-0.5	VCC+0.5	V
IIK	Input clamp current	VI <0	-	-50	mA
IOK	Output clamp current	VO <0	-	-50	mA
IO	Continuous output current		-	±50	mA
	Continuous current through VCC or GND		-	±100	mA
• current parameters					
θ JA	Thermal resistance to the environment	SOT23-5	-	208	°C/W
• current parameters					
temperature parameter	Junction temperature, TJ		-	150	°C
	Storage temperature range, Tstg		-65	150	

AOTE All Rights Reserved. Release Date :April 7, 2026

◆ ESD level

The following ESD information is only applicable to sensitive equipment operated within an ti-static protection zones

_	nominal value	Unit
human model (HBM)	±2000	V
Charged Device Model (CDM)	±1000	
Mechanical Model (MM)	±200	



ESD sensitivity warning

The scope of ESD damage can range from minor performance degradation to complete equipment failure. Precision integrated circuits may be more susceptible to damage as very small parameter changes can result in devices not meeting their published parameter specifications.

Attention:

(1) This only represents the limit values obtained by the product under testing conditions, and does not mean that the product can work normally under these conditions or other parameter conditions beyond the specifications. Exceeding the range specified by the absolute maximum rated value above will cause damage to the product, and it is impossible to predict the working state of the product outside of the above conditions. If the product operates under conditions other than those mentioned above for a long time, it may affect its performance.

(2) If the input and output current ratings are followed, it may exceed the input and output negative voltage ratings.

(3) The value of VCC is provided in the recommended working condition table.

(4) The thermal impedance of the package is calculated according to JESD-51 standard:

(5) The maximum power consumption is a function of $T_{J\,(MAX)}$, RθJA, and T_A. The maximum power consumption at any ambient temperature is $Po=(T_{J\,(MAX)} - T_A)/R\theta JA$, which is suitable for packaging directly soldered to PCB.

◆ Electrical Characteristics

(Within the natural ventilation temperature range (typical test conditions are: TA=+25 ° C, full temperature=-40 ° C~125 ° C)

◆ Recommended working conditions

Parameter	symbol	Test conditions	Min	Max	Unit
power supply voltage	Vcc	work	2.0	5.5	V
input voltage	V_I	-	0	5.5	V
output voltage	V_O	-	0	5.5	V
Working temperature range under natural ventilation conditions	T_A	-	-40	125	°C

All unused input ports of the device must be kept at VCC or GND to ensure proper operation of the device

AOTE All Rights Reserved. Release Date :April 7, 2026

◆ DC characteristics

Parameter	Test conditions	Vcc	temperature	Min	Typ	Max	Unit
V_{T+}	Forward input threshold voltage	2.0	Full temperature	0.7	-	1.2	V
		3.3		1		1.5	
		4.5V-5.5V		1.2		2	
V_{T-}	Negative input threshold voltage	2.0	Full temperature	0.3	-	0.6	V
		3.3		0.5		0.9	
		4.5V-5.5V		0.6		1.2	
ΔV_T	hysteresis (V_{T+}-V_{T-})	2.0	Full temperature	0.3	-	0.8	V
		3.3		0.3		1	
		4.5V-5.5V		0.3		1.2	
V_{OH}	I_{OH} = -100μA	2.0V-5.5V	Full temperature	VCC-0.1	-	-	V
	I_{OH} = -8mA	2.0		1.6			
	I_{OH} = -24mA	3.3		2.5			
	-	4.5V		3.8			
	I_{OH} = -32mA	5V		4.2			
	-	5.5V		4.8			
V_{OL}	I_{OL} = 100μA	2.0V-5.5V	Full temperature	-	-	0.1	V
	I_{OH} = 8mA	2.0		-	-	0.45	
	I_{OH} = 24mA	3.3		-	-	0.55	
	-	4.5V		-	-	0.55	
	I_{OL} = 32mA	5V		-	-	0.5	
	-	5.5V		-	-	0.45	
I_I Input A or B	V_I =5.5V orGND	0V - 5.5V	+25°C Full temperature	-	±0.1	±10	μA
I_{off}	V_I or V_O=5.5V	0V	+25°C Full temperature	-	±0.1	±10	μA
I_{CC}	V_I =5.5V or GND, I_O=0	2.0V - 5.5V	25°C Full temperature	-	0.1	10	μA
ICCT	One input at 3.4V, Other inputs at VCC or GND	5.5V	Full temperature			500	μA

(1) All unused input ports of the device must be kept at VCC or GND to ensure proper operation of the device.
(2) The limit value is 100% production testing conducted at 25°C. Ensure the limitation of the working temperature range by utilizing the correlation of statistical quality control (SQC) methods.
(3) Typical values represent the most likely parameter specifications determined during characterization. The actual typical values may vary over time and will also depend on the application and configuration.

AOTE All Rights Reserved. Release Date :April 7, 2026

◆ AC characteristics

Parameter	symbol	Test conditions		Min	Typ	Max	Unit	Parameter
propagation delay	tpd	VCC =2.0V±0.2V	CL=30pF, RL=500Ω	+25°C	-	29	-	ns
		VCC =3.3V±0.3V	CL=50pF, RL=500Ω			10.4		
		VCC =5V±0.5V	CL=50pF, RL=500Ω			7.6		
input capacitance	Ci	VCC =5V	VI=VCC or GND	+25°C		4.2		pF
Power consumption capacitor	Cpd	VCC =5V	f=10MHz	+25°C		16.6		pF

(1) All unused input ports of the device must be kept at VCC or GND to ensure proper operation of the device.

(2) This parameter is ensured by design and/or characteristics and has not been tested in production.

(3) Typical values represent the most likely parameter specifications determined during characterization. The actual typical values may vary over time and will also depend on the application and configuration.

AOTE All Rights Reserved. Release Date :April 7, 2026

◆ Parameter measurement information

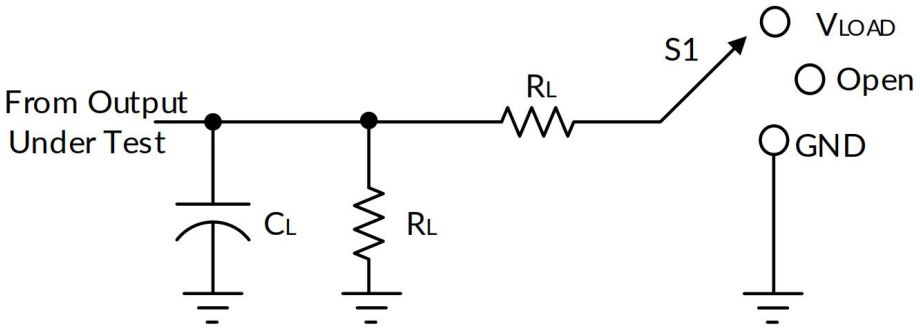

TEST	S1
t_{PLH}/t_{PHL}	Open
t_{PLZ}/t_{PZL}	V_{LOAD}
t_{PHZ}/t_{PZH}	GND

VCC	INPUTS		VM	VLOAD	CL	RL	VΔ
	VI	tr/tf					
2.0V±0.2V	VCC	≤2ns	VCC/2	2 x VCC	30pF	500Ω	0.15V
3.3V±0.3V	3V	≤2.5ns	1.5V	6V	50pF	500Ω	0.3V
5V±0.5V	VCC	≤2.5ns	VCC/2	2 x VCC	50pF	500Ω	0.3V

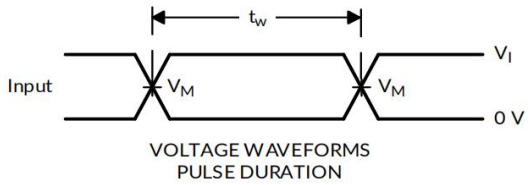

VOLTAGE WAVEFORMS
PULSE DURATION

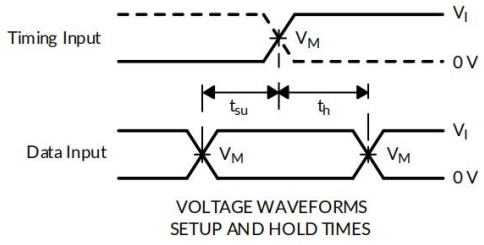

VOLTAGE WAVEFORMS
SETUP AND HOLD TIMES

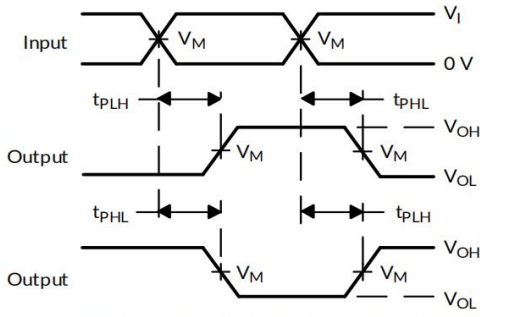

VOLTAGE WAVEFORMS PROPAGATION DELAY
TIMES INVERTION AND NONINVERTING OUTPUTS

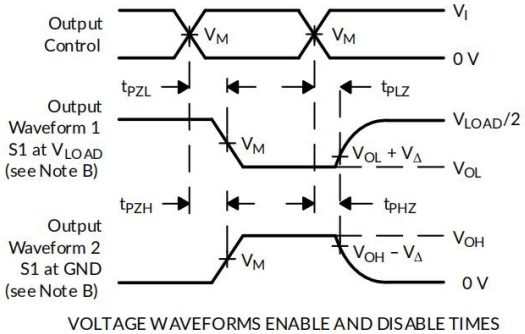

VOLTAGE WAVEFORMS ENABLE AND DISABLE TIMES
LOW-AND HIGH-LEVEL ENABLING

Note: A.CL includes probe and fixture capacitors.
B. Waveform 1 is used for outputs with internal conditions, where the output is low unless disabled by the output controller. Waveform 2 is used for outputs with internal conditions, where the output is high unless disabled by the output controller.
C. All input pulses are provided by a generator with the following characteristics: PRR≤10MHz, Zo=50Ω
D. Output one measurement at a time, with a transition for each measurement.
E. T_{PLZ} and t_{PHZ} are the same as t_{dis}.
F. T_{PZL} and t_{PZH} are the same as t_{en}.
G. T_{PLH} and t_{PHL} are the same as t_{pd}.
H.Not all parameters and waveforms are applicable to all devices.

AOTE All Rights Reserved. Release Date :April 7, 2026

◆ Packaging specifications size

REEL DIMENSIONS

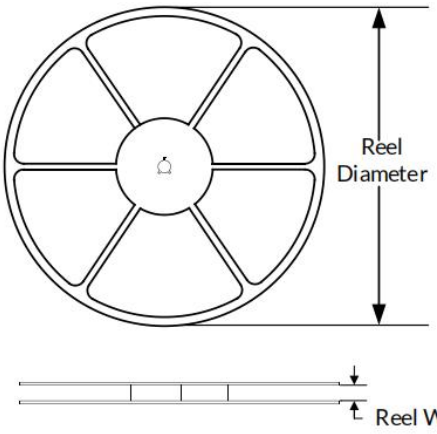

TAPE DIMENSION

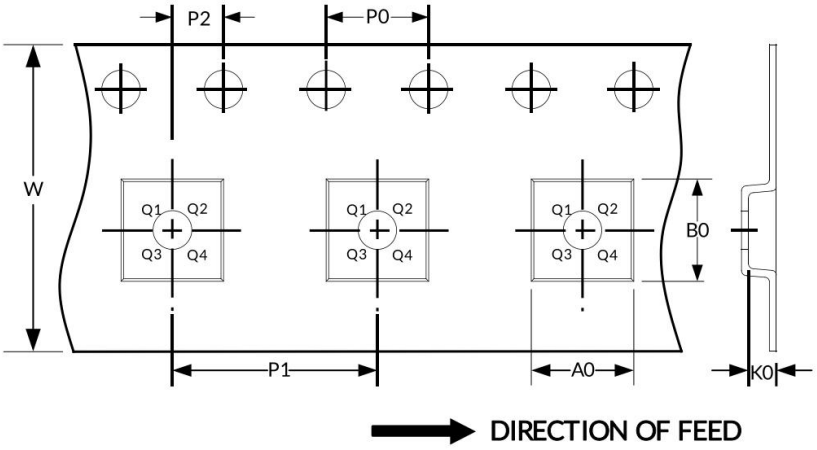

Attention: The pictures are for reference only. Please use the physical object as the standard

◆ Key parameter table

Package Type	Reel Diameter	Reel Width (mm)	A0 (mm)	B0 (mm)	K0 (mm)	P0 (mm)	P1 (mm)	P2 (mm)	W (mm)	Pin1 Quadrant
SOT23-5	7″	9.5	3.20	3.20	1.40	4.0	4.0	2.0	8.0	Q3

Attention:
All dimensions are nominal sizes.
Excluding plastic wrap or metal protrusions with a maximum of 0.15 millimeters on each side.

AOTE All Rights Reserved. Release Date :April 7, 2026

◆ Packaging specifications and dimensions

Attention:

1、Excluding plastic wrap or metal protrusions with a maximum of 0.15mm on each side.

2、BSC (Basic Center Spacing), where the "basic" spacing is the nominal spacing.

3、This image is subject to change without prior notice

SOT23-5

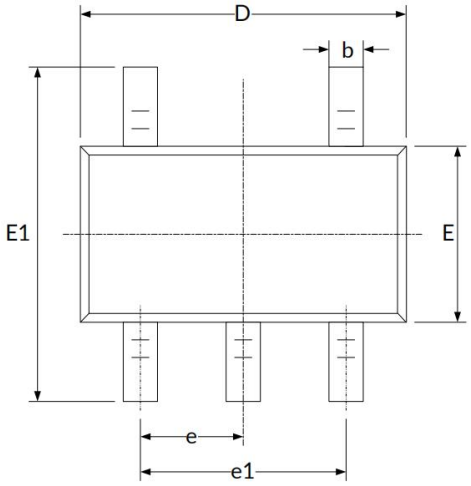

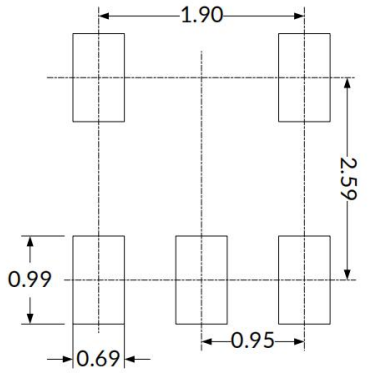

RECOMMENDED LAND PATTERN (Unit: mm)

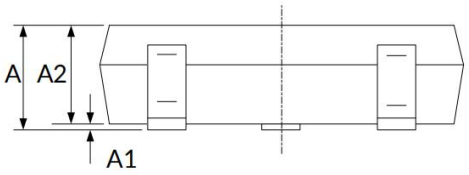

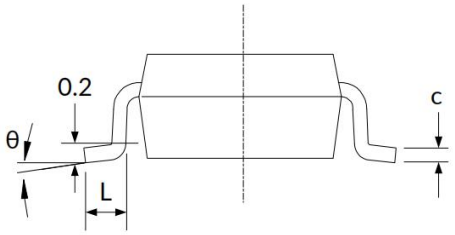

symbol	Dimensions (in millimeters)		Dimensions (in inches)	
	Min	Max	Min	Max
A	1.050	1.250	0.041	0.049
A1	0.000	0.100	0.000	0.004
A2	1.050	1.150	0.041	0.045
b	0.300	0.500	0.012	0.020
C	0.100	0.200	0.004	0.008
D	2.820	3.020	0.111	0.119
E	1.500	1.700	0.059	0.067
E1	2.650	2.950	0.104	0.116
e	0.950 (BSC)		0.037 (BSC)	
e1	1.800	2.000	0.071	0.079
L	0.300	0.600	0.012	0.024
θ	0°	8°	0°	8°

AOTE All Rights Reserved. Release Date :April 7, 2026

◆ Attention

- AOTE implements dynamic technical updates. Specifications are subject to change. Refer to the official website for the latest version.
- Users must strictly adhere to specified conditions. Failures caused by misuse (overload, high temperature, incompatible circuits) are excluded from warranty.
- Contact technical support for customized validation in critical applications (medical devices, industrial control).
- This document is valid until December 31, 2027 Updates will be notified on the official website.
- For further clarification on technical specifications or application solutions, please contact us through official channels:

AOTE All Rights Reserved. Release Date :April 7, 2026