Kinghelm®

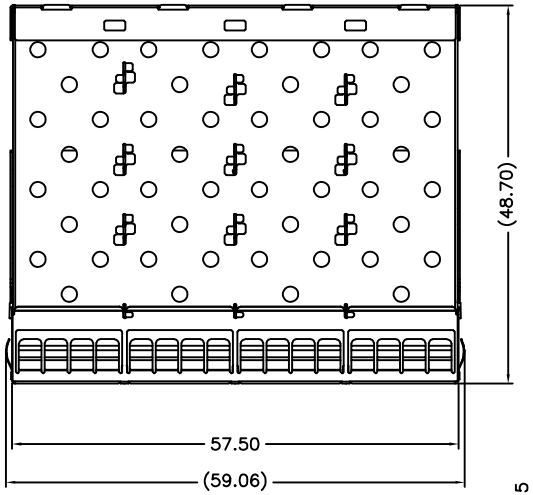

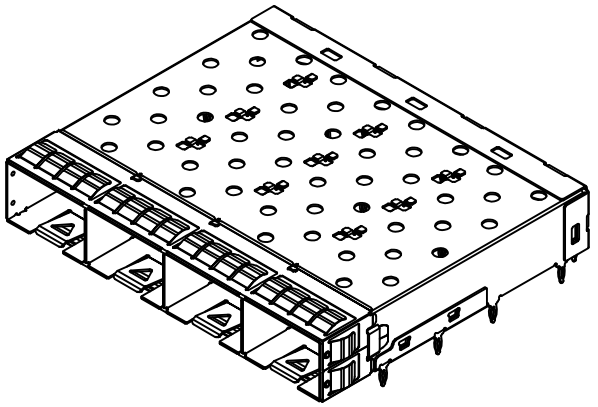

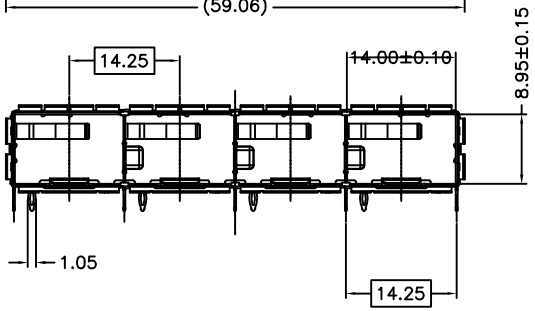

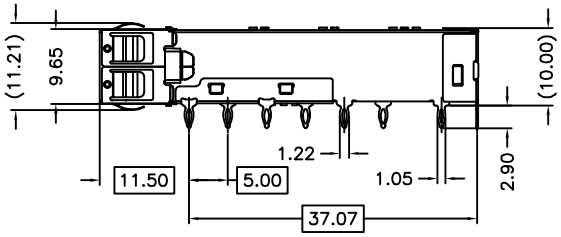

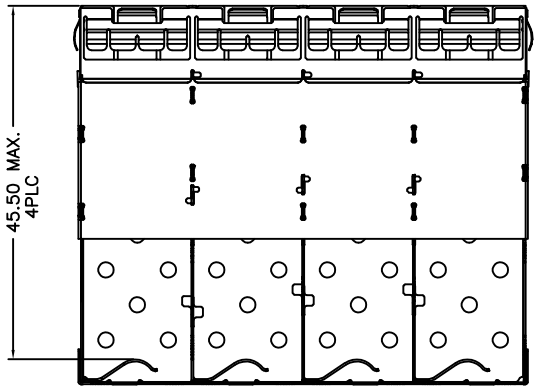

NOTES:
1.MATERIAL: STAINLESS STEEL , THICKNESS 0.25mm, NI-PLATED
2.PACKAGING: TRAY PACKAGING
3.TEMPERATURE RANGE: -55°C TO +85°C

深圳市金航标电子有限公司
SHENZHEN KINGHELM ELECTRONIC CO.,LTD.
www.kinghelm.com.cn 0755-28190160

THIRD ANGLE PROJECTION	TITLE		
DRAWING IS SUBJECT TO CHANGE WITHOUT NOTICE	PART NO: KH-SFP-N4Y-10G	DRN BY: TONY	DATE: 12-10-08
DECIMALS: X.X±0.20 X.XX±0.15 X.XXX±0.10 ANGLES: X.X°±0.1° X.XX°±5°	Product: PCB JACK RJ45 RJ11 USB CONNECTOR SFP CONNECTOR TRANSFORMER	APPD BY: JIM	SHEET NO. 1 OF 3
DIMENSIONS: mm		DWG NO: SFP-2N4Y010-41	REV: A10

文件编号：RD-23-03-A

Kinghelm®

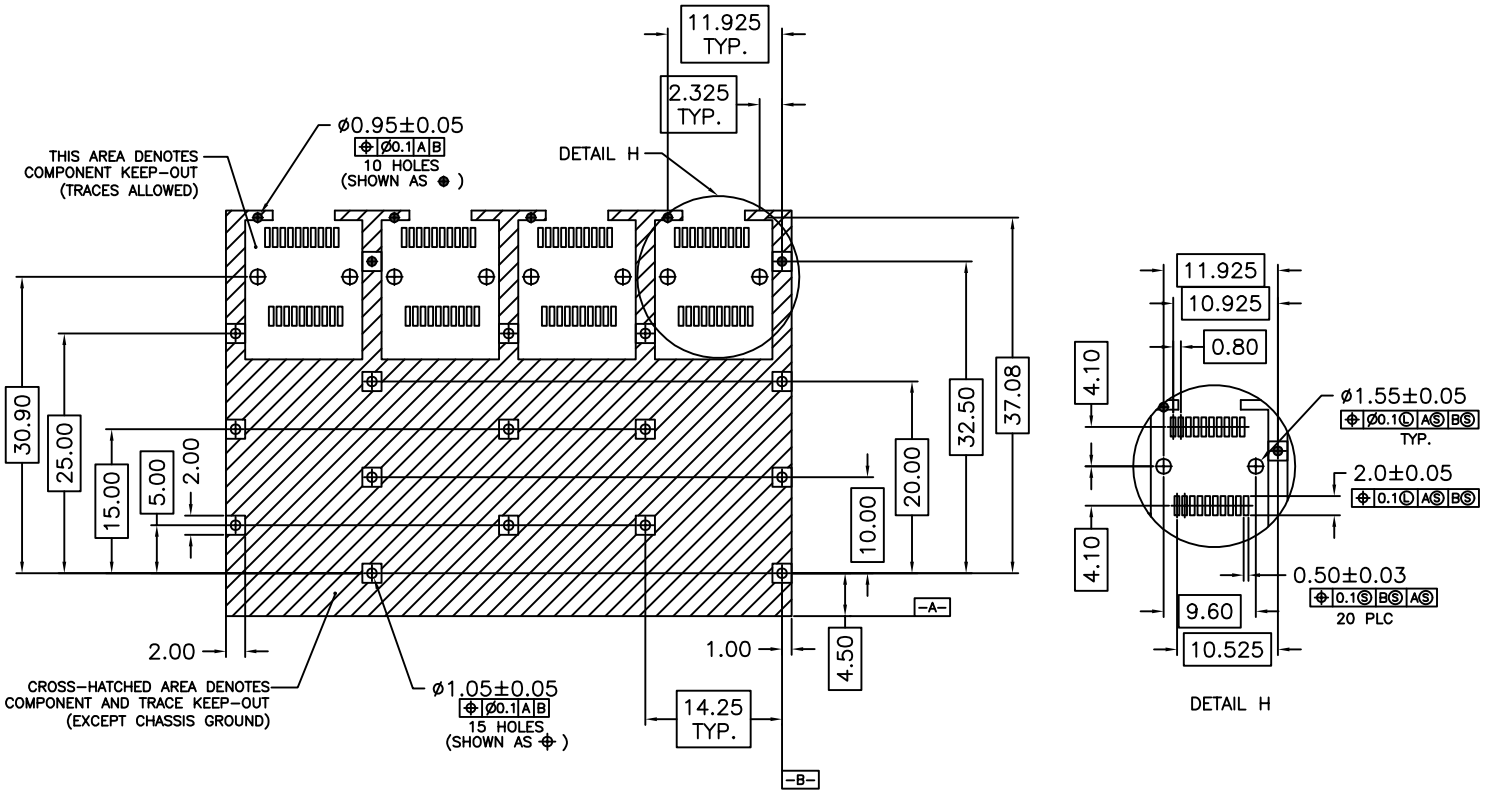

ECOMMENDED PCB CONFIGURATION

NOTES:

1. DATUM AND BASIC DIMENSIONS ESTABLISHED BY CUSTOMER
2. PADS AND VIAS ARE CHASSIS GROUND, 11 PLACES
3. THRU HOLES, PLATING OPTIONAL

深圳市金航标电子有限公司
SHENZHEN KINGHELM ELECTRONIC CO.,LTD.
www.kinghelm.com.cn 0755-28190160

THIRD ANGLE PROJECTION	TITLE		
DRAWING IS SUBJECT TO CHANGE WITHOUT NOTICE	PART NO: KH-SFP-N4Y-10G	DRN BY: TONY	DATE: 12-10-08
DECIMALS: X.X±0.20 X.XX±0.15 X.XXX±0.10 ANGLES: X.X°±0.1° X.XX°±5°	Product: PCB JACK RJ45 RJ11 USB CONNECTOR SFP CONNECTOR TRANSFORMER	APPD BY: JIM	SHEET NO. 2 OF 3
DIMENSIONS: mm		DWG NO: SFP-2N4Y010-41	REV: A10

文件编号：RD-23-03-A

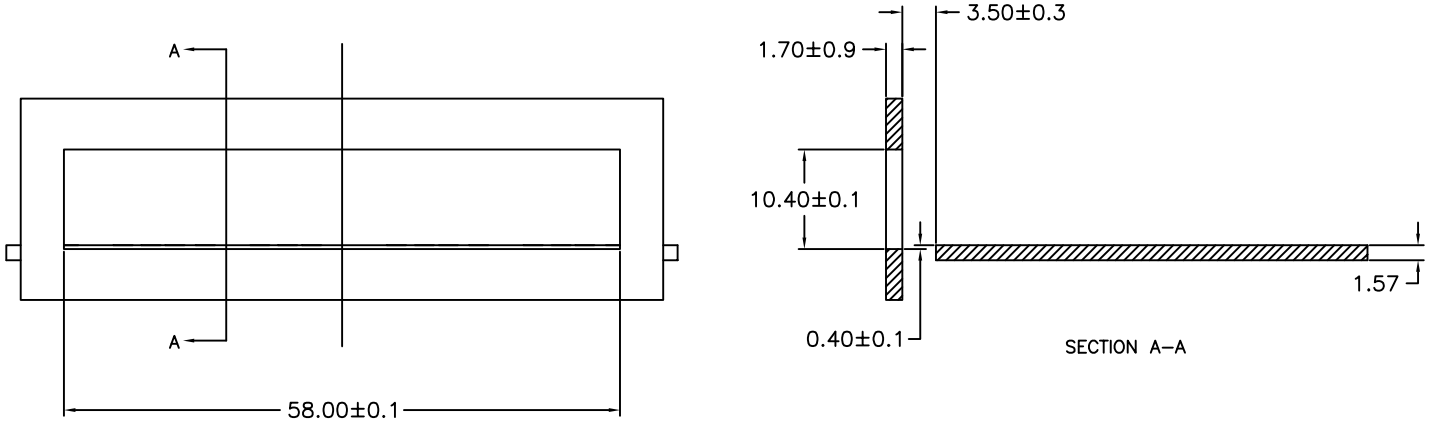

RECOMMENDED BEZEL DESIGN

NOTES:
⚠1 MINIMUM PITCH ILLUSTRATED, ENGLISH DIMENSIONS ARE FOR REFERENCE ONLY

深圳市金航标电子有限公司 SHENZHEN KINGHELM ELECTRONIC CO.,LTD. www.kinghelm.com.cn 0755-28190160			
THIRD ANGLE PROJECTION	TITLE		
DRAWING IS SUBJECT TO CHANGE WITHOUT NOTICE	PART NO: KH-SFP-N4Y-10G	DRN BY: TONY	DATE: 12-10-08
DECIMALS: X.X±0.20 X.XX±0.15 X.XXX±0.10 ANGLES: X.X°±0.1° X.XX°±5°	Product: PCB JACK RJ45 RJ11 USB CONNECTOR SFP CONNECTOR TRANSFORMER	APPD BY: JIM	SHEET NO. 3 OF 3
DIMENSIONS: mm		DWG NO: SFP-2N4Y010-41	REV: A10

文件编号：RD-23-03-A