Kinghelm®

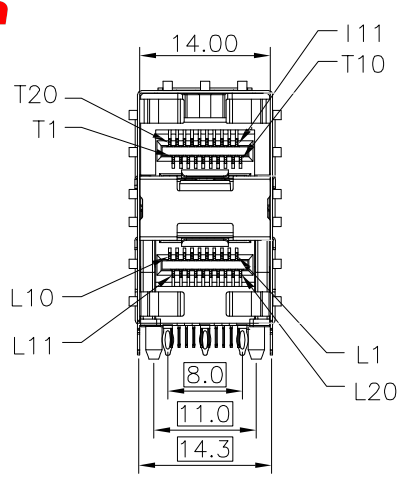

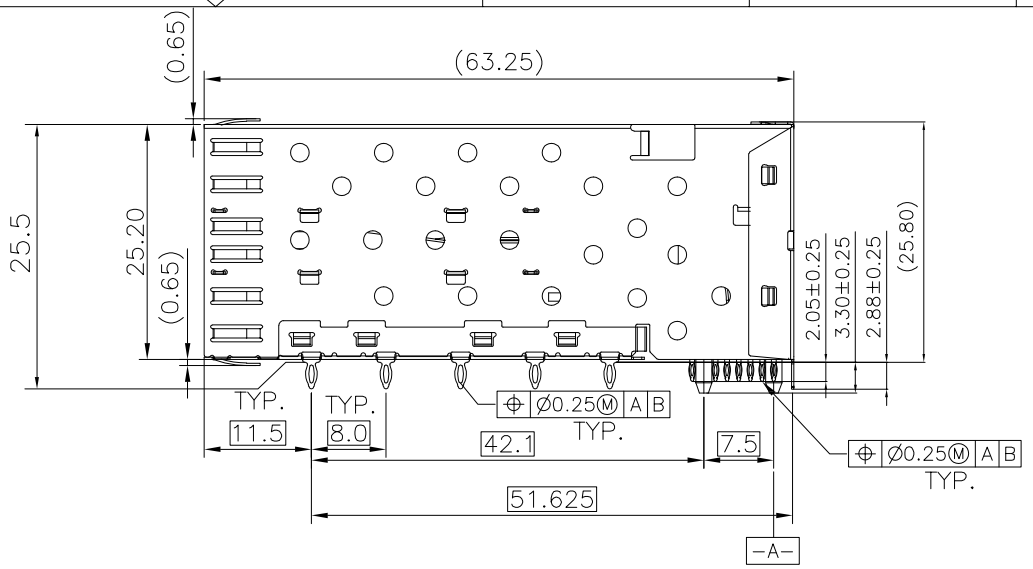

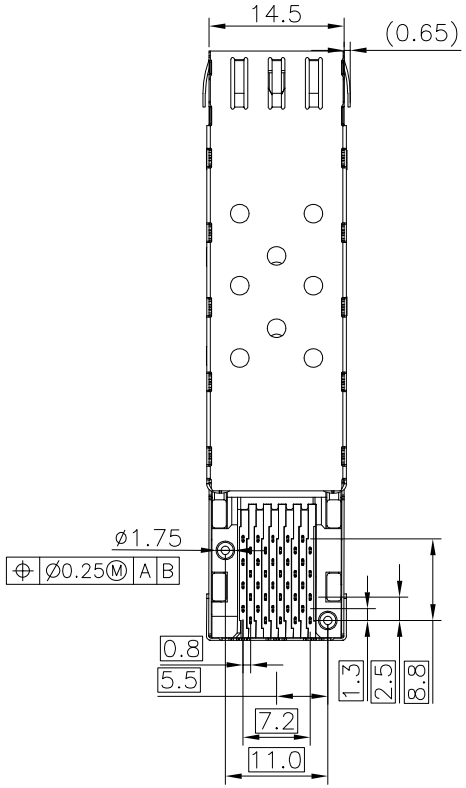

NOTES:
MATERIAL:
CAGE:STAINLESS STEEL30U"MIN NI-PLATED,THICKNESS0.25MM
CONNECTOR:
PLASTIC:HOUSING:HIGH TEMPERATURE LCP,UL94V-0
SPRING:STAINLESS STEEL,THICKNESS 0.20MM
CONTACTS:PHOSPHOR BRONZE,THICKNESS 0.20MM
PLATING:15U" MIN.GOLD ON MATING AREA,
150U"MIN.MATE TIN ON SOLDER TAILS,
PACKAGING:TRAY PACKAGING,
TEMPERATURE RANGE:-40°C TO +85°C
STORAGE TEMPERATURE:-55°C TO +105°C

深圳市金航标电子有限公司
SHENZHEN KINGHELM ELECTRONIC CO.,LTD.
www.kinghelm.com.cn 0755-28190160

THIRD ANGLE PROJECTION	TITLE		
DRAWING IS SUBJECT TO CHANGE WITHOUT NOTICE	PART NO: KH-SFP-A100-4105	DRN BY: TONY	DATE: 05-10-2024
DECIMALS: .X±0.20 .XX±0.15 .XXX±0.10 ANGLES: X.°±1° X.X°±5° DIMENSIONS: mm	Product: PCB JACK RJ45 RJ11 USB CONNECTOR SFP CONNECTOR TRANSFORMER	APPD BY: JIM	SHEET NO. 1 OF 4
		DWG NO: SFP-A100-02	REV: A10

文件编号：RD-23-03-A

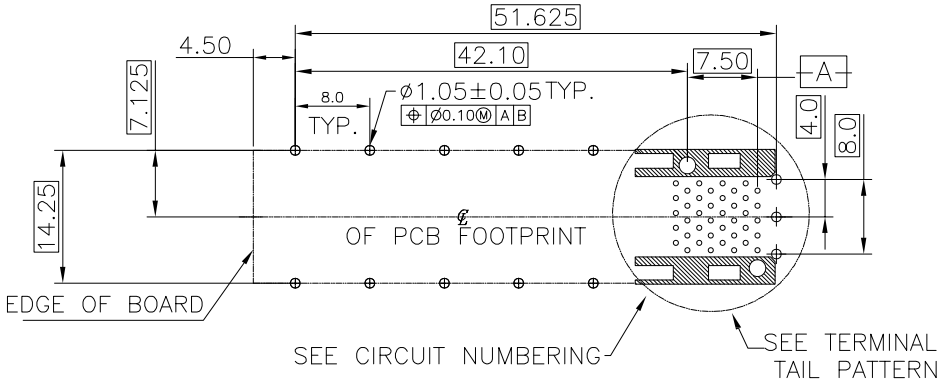

RECOMMENDED PCB LAYOUT – COMPONENT SIDE
RECOMMENDED PCB THICKNESS : 2.36MM(.093 INCH)
(MINIMUM PCB THICKNESS : 1.57)

THE ENTIRE AREA OF THE CONNECTOR FOOTPRINT
TO BE CONSIDERED THE KEEP OUT AREA FOR COMPONENTS
THIS AREA IS INDICATED BY THE DASHED LINE

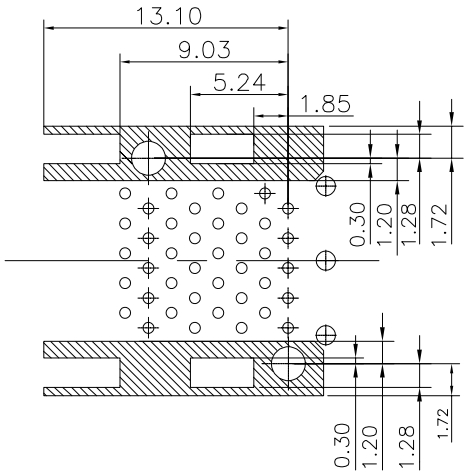

DETAIL–KEEPOUT ZONES

THE HATCHED AREA IN THIS VIEW INDICATES ZONES
THAT ARE OCCUPIED BY THE PLASTIC HOUSING THAT
SEATS AGAINST THE PCB AND BY THE VERTICAL METAL
CAGE WALL THAT STOPS JUST SHORT OF THE PCB

DETAIL B
SCALE 2:1

深圳市金航标电子有限公司
SHENZHEN KINGHELM ELECTRONIC CO.,LTD.
www.kinghelm.com.cn 0755-28190160

THIRD ANGLE PROJECTION	TITLE		
DRAWING IS SUBJECT TO CHANGE WITHOUT NOTICE	PART NO: KH-SFP-A100-4105	DRN BY: TONY	DATE: 05-10-2024
DECIMALS: .X±0.20 .XX±0.15 .XXX±0.10 ANGLES: X.°±1° X.X°±5°	Product: PCB JACK RJ45 RJ11 USB CONNECTOR SFP CONNECTOR TRANSFORMER	APPD BY: JIM	SHEET NO. 2 OF 4
DIMENSIONS: mm		DWG NO: SFP-A100-02	REV: A10

文件编号：RD-23-03-A

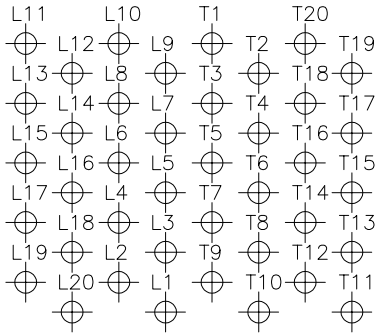

CIRCUIT NUMBERING
COMPONENT SIDE OF BOARD

DETAIL B
SCALE 4:1

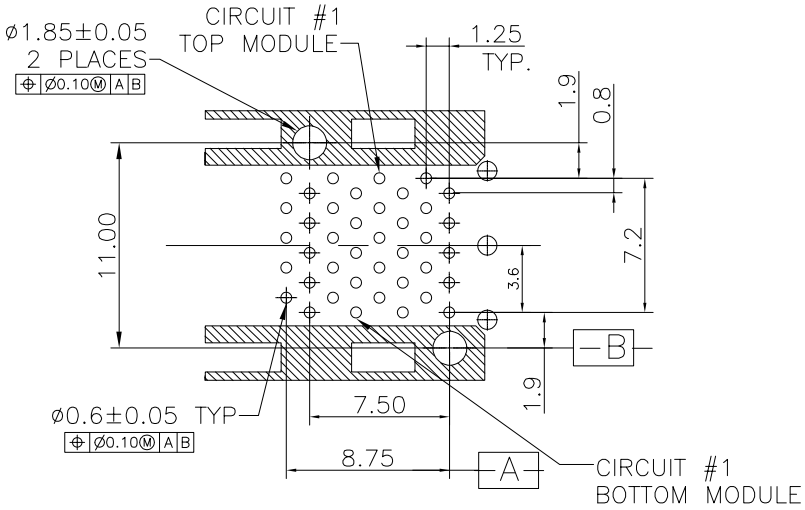

TERMINAL TAIL PATTERN

DETAIL B
SCALE 2:1

深圳市金航标电子有限公司 SHENZHEN KINGHELM ELECTRONIC CO.,LTD. www.kinghelm.com.cn 0755-28190160			
THIRD ANGLE PROJECTION	TITLE		
DRAWING IS SUBJECT TO CHANGE WITHOUT NOTICE	PART NO: KH-SFP-A100-4105	DRN BY: TONY	DATE: 05-10-2024
DECIMALS: .X±0.20 .XX±0.15 .XXX±0.10 ANGLES: X.°±1° X.X°±5° DIMENSIONS: mm	Product: PCB JACK RJ45 RJ11 USB CONNECTOR SFP CONNECTOR TRANSFORMER	APPD BY: JIM DWG NO: SFP-A100-02	SHEET NO. 3 OF 4 REV: A10

文件编号：RD-23-03-A

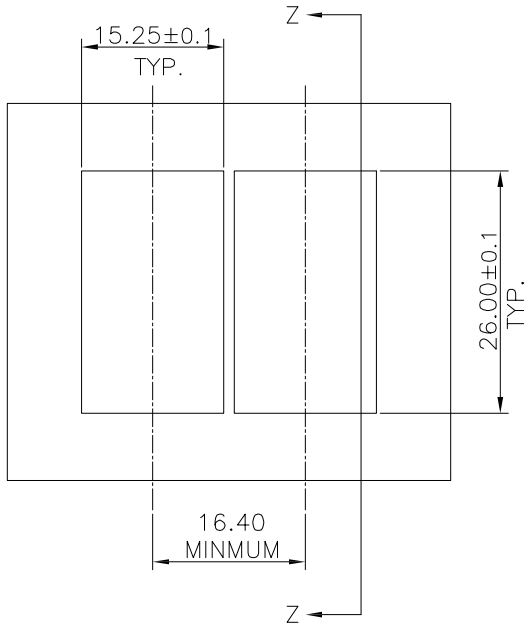

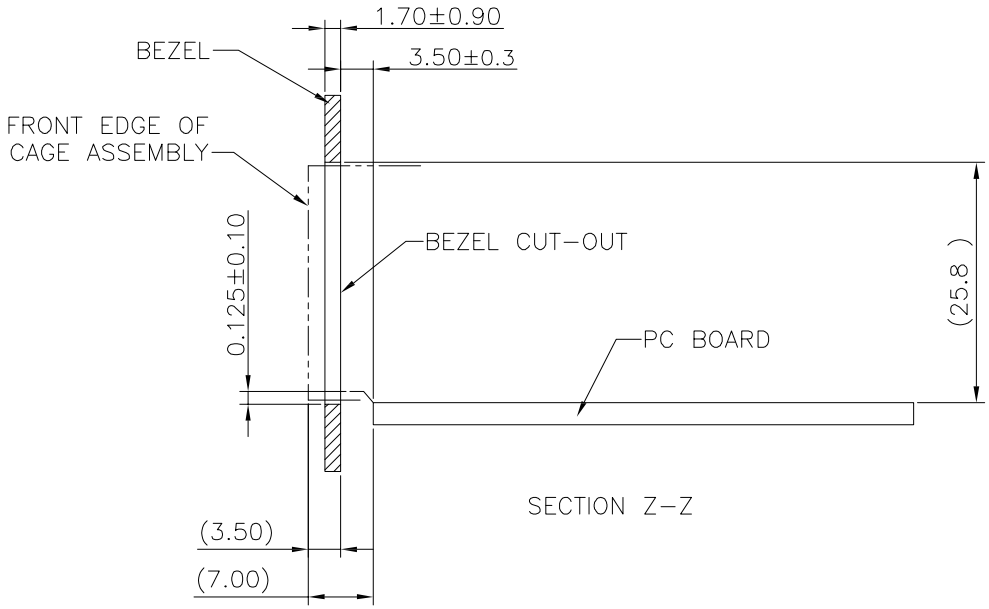

SECTION Z-Z

BEZEL CUT-OUT CENTER SPACING DETAIL

深圳市金航标电子有限公司
SHENZHEN KINGHELM ELECTRONIC CO.,LTD.
www.kinghelm.com.cn 0755-28190160

THIRD ANGLE PROJECTION	TITLE		
DRAWING IS SUBJECT TO CHANGE WITHOUT NOTICE	PART NO: KH-SFP-A100-4105	DRN BY: TONY	DATE: 05-10-2024
DECIMALS: .X±0.20 .XX±0.15 .XXX±0.10 ANGLES: X.°±1° X.X°±5°	Product: PCB JACK RJ45 RJ11 USB CONNECTOR SFP CONNECTOR TRANSFORMER	APPD BY: JIM	SHEET NO. 4 OF 4
DIMENSIONS: mm		DWG NO: SFP-A100-02	REV: A10

文件编号：RD-23-03-A

Kinghelm®

PACKAGE INFORMATION AND LABLE

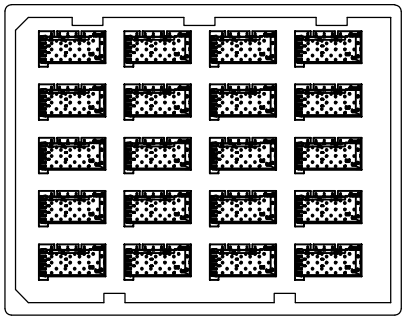

1. 20PCS PRODUCTS IN TRAYS

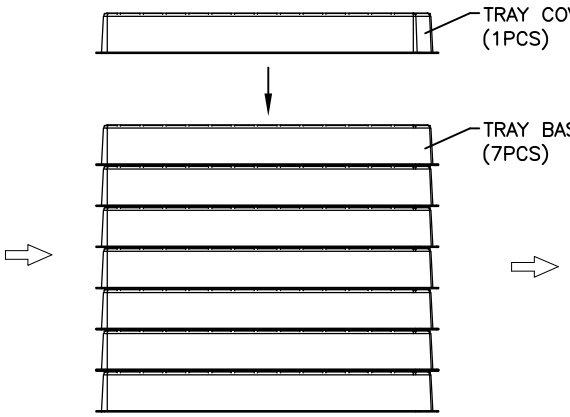

2. TRAYS OVERLAY:
(THE NEXT TRAY NEED ROTATE 180 DEGREE AND PUT IT ON PREVIOUS TRAY.)
(相邻两个吸塑间水平方向成180度摆放)

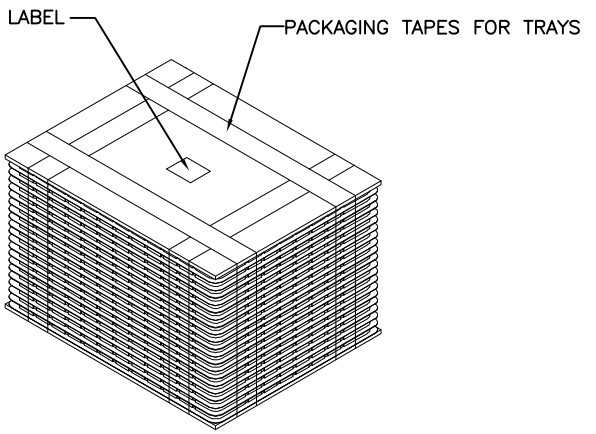

3. LABEL & PACKAGING TAPES FOR TRAYS:

PACKAGING LISTS	
ITEM	Q'TY
CAGE ASSEMBLY	140 PCS
TRAY COVER	1 PCS
TRAY BASE	7 PCS
BOX(L340*W265*H200MM)	1 PCS
LABLE	2 PCS
PACKAGING TAPES	8 M (ABOUT)

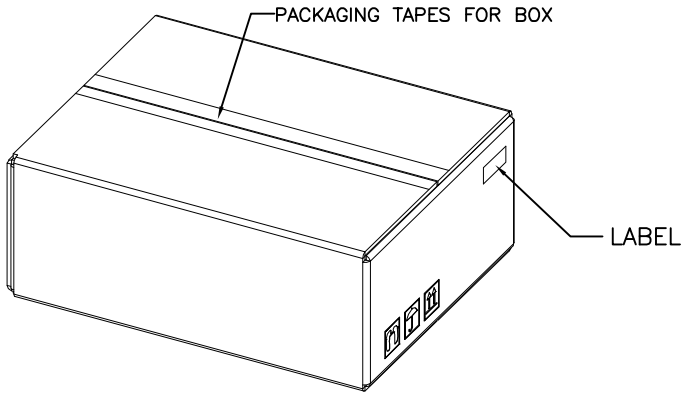

4. LABEL & PACKAGING TAPES FOR BOX

深圳市金航标电子有限公司
SHENZHEN KINGHELM ELECTRONIC CO.,LTD.
www.kinghelm.com.cn 0755-28190160

THIRD ANGLE PROJECTION	TITLE		
DRAWING IS SUBJECT TO CHANGE WITHOUT NOTICE	PART NO: KH-SFP-A100-4105	DRN BY: TONY	DATE: 24-12-24
DECIMALS: X±0.20 X.X±0.15 X.XX±0.10 ANGLES: X.°±0.2° X.X°±0.1°	Product: PCB JACK RJ45 RJ11 USB CONNECTOR SFP CONNECTOR TRANSFORMER	APPD BY: JIM	SHEET NO. 2 OF 4
DIMENSIONS: mm		DWG NO:	REV: A10