Kinghelm®

MECHANICAL DIMENSION

DATE	REV	ECN	APP'D.BY

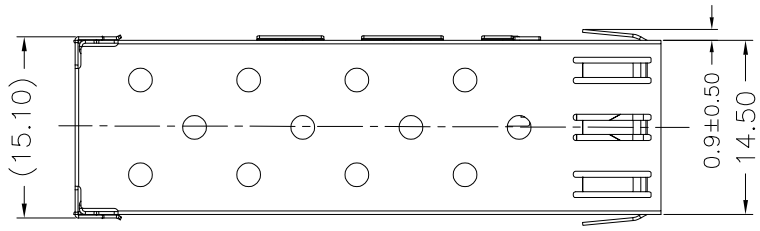

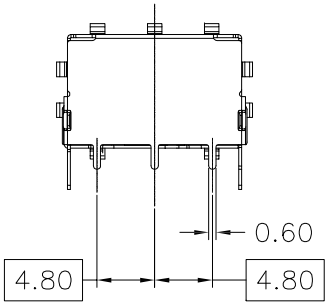

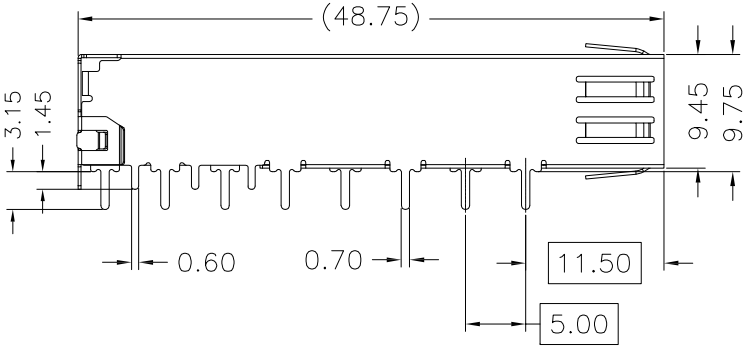

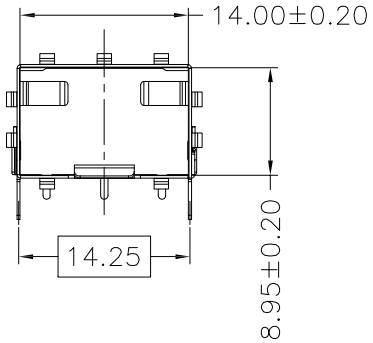

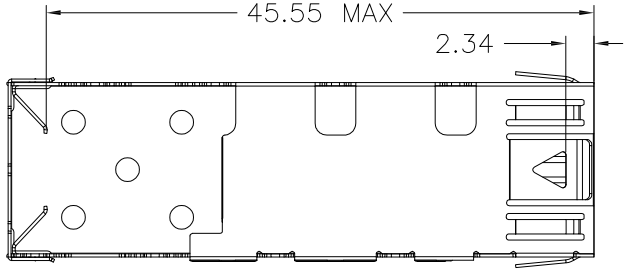

NOTES:

1.MATERIAL: STAINLESS STEEL, NI-PLATED

2.PACKAGING: TRAY PACKAGING

3.TEMPERATURE RANGE: -55°C TO +85°C

RoHS

THIRD ANGLE PROJECTION	深圳市金航标电子有限公司 SHENZHEN KINGHELM ELECTRONIC CO.,LTD. www.kinghelm.com.cn 0755-28190160		
DO NOT SCALE DRAWING	TITLE		
DRAWING IS SUBJECT TO CHANGE WITHOUT NOTICE			
DIMENSIONS: mm(INCH) .X±0.20 .XXX±0.10 .XX±0.15	PART NO: KH-SFP-N1H-1G	DRN BY: TONY	DATE: 07-01-22
SHEET NO. 1 OF 4	Product: PCB JACK RJ45 RJ11 USB CONNECTOR SFP CONNECTOR TRANSFORMER	APPD BY: JIM	DATE: 07-01-22
		DWG NO: SFP10018	REV: A10

DATE	REV	ECN	APP'D.BY

Kinghelm®

MECHANICAL DIMENSION

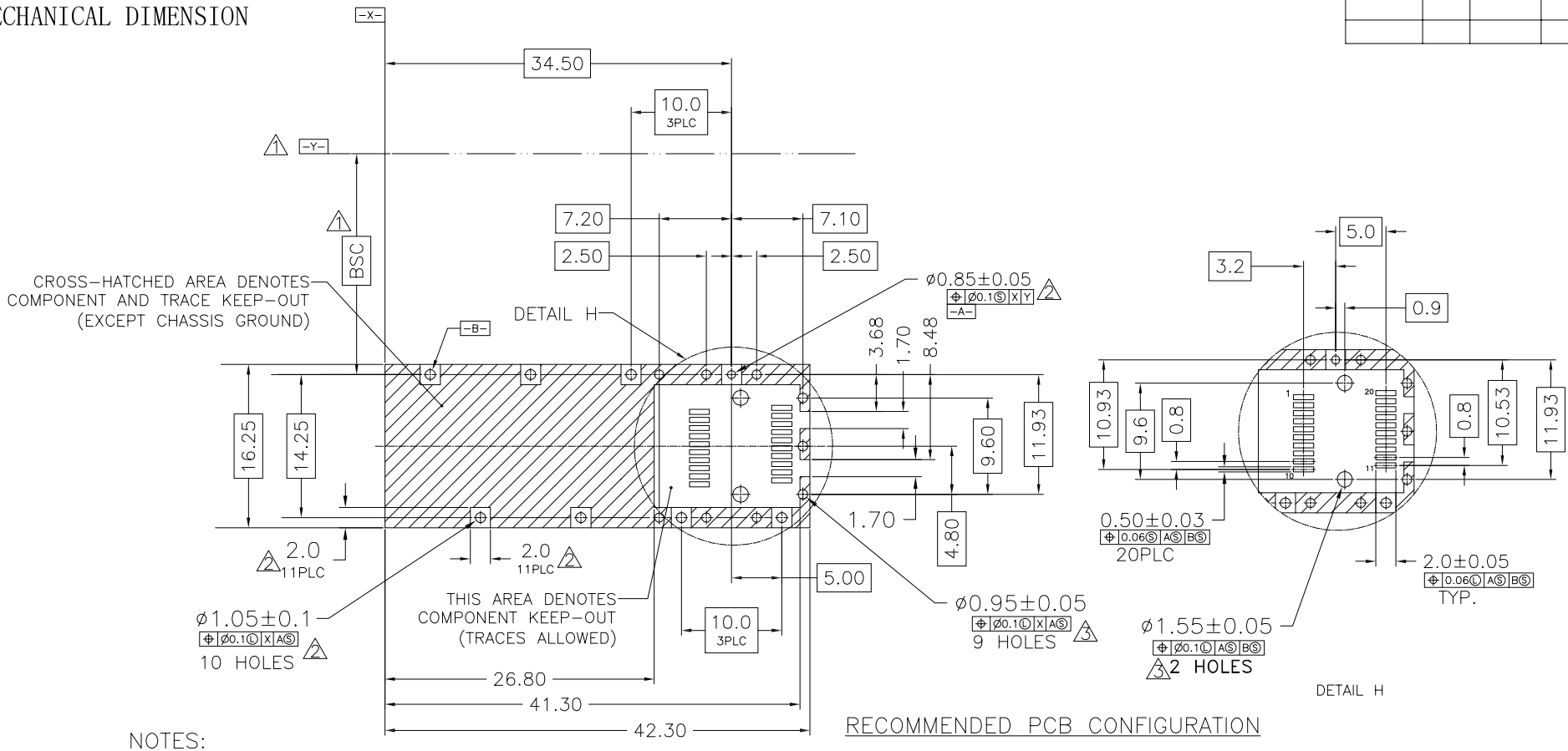

RECOMMENDED PCB CONFIGURATION

NOTES:

1. DATUM AND BASIC DIMENSIONS ESTABLISHED BY CUSTOMER
2. PADS AND VIAS ARE CHASSIS GROUND, 11 PLACES
3. THRU HOLES, PLATING OPTIONAL

RoHS

THIRD ANGLE PROJECTION	深圳市金航标电子有限公司 SHENZHEN KINGHELM ELECTRONIC CO.,LTD. www.kinghelm.com.cn 0755-28190160		
DO NOT SCALE DRAWING	TITLE		
DRAWING IS SUBJECT TO CHANGE WITHOUT NOTICE			
DIMENSIONS: mm(INCH) .X±0.20 .XXX±0.10 .XX±0.15	PART NO: KH-SFP-N1H-1G	DRN BY: TONY	DATE: 07-01-22
SHEET NO. 2 OF 4	Product: PCB JACK RJ45 RJ11 USB CONNECTOR SFP CONNECTOR TRANSFORMER	APPD BY: JIM	DATE: 07-01-22
		DWG NO: SFP10018	REV: A10

DATE	REV	ECN	APP'D.BY

MECHANICAL DIMENSION

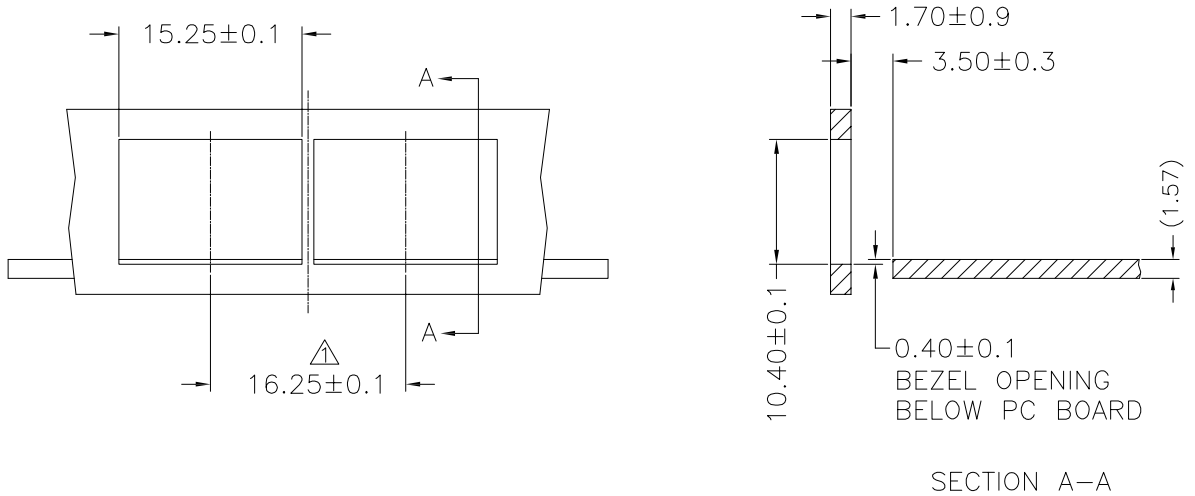

RECOMMENDED BEZEL DESIGN

NOTES:
⚠1 MINIMUM PITCH ILLUSTRATED, ENGLISH DIMENSIONS ARE FOR REFERENCE ONLY

THIRD ANGLE PROJECTION	深圳市金航标电子有限公司 SHENZHEN KINGHELM ELECTRONIC CO.,LTD. www.kinghelm.com.cn 0755-28190160		
DO NOT SCALE DRAWING	TITLE		
DRAWING IS SUBJECT TO CHANGE WITHOUT NOTICE			
DIMENSIONS: mm(INCH) .X±0.20 .XXX±0.10 .XX±0.15	PART NO: KH-SFP-N1H-1G	DRN BY: TONY	DATE: 07-01-22
SHEET NO. 3 OF 4	Product: PCB JACK RJ45 RJ11 USB CONNECTOR SFP CONNECTOR TRANSFORMER	APPD BY: JIM	DATE: 07-01-22
		DWG NO: SFP10018	REV: A10

RoHS

Kinghelm®

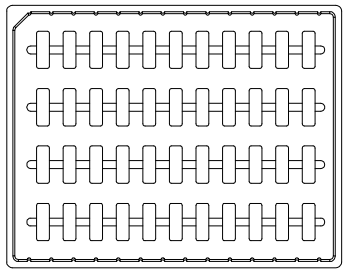

1. PRODUCTS IN TRAYS

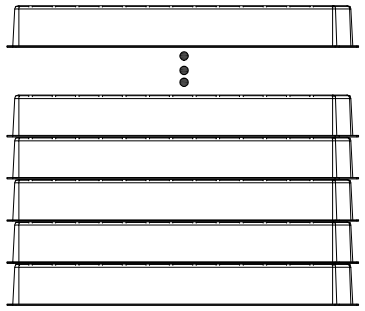

2. TRAYS OVERLAY:
(THE NEXT TRAY NEED ROTATE 180 DEGREE AND PUT IT ON PREVIOUS TRAY.)
(相邻两个吸塑间水平方向成180度摆放)

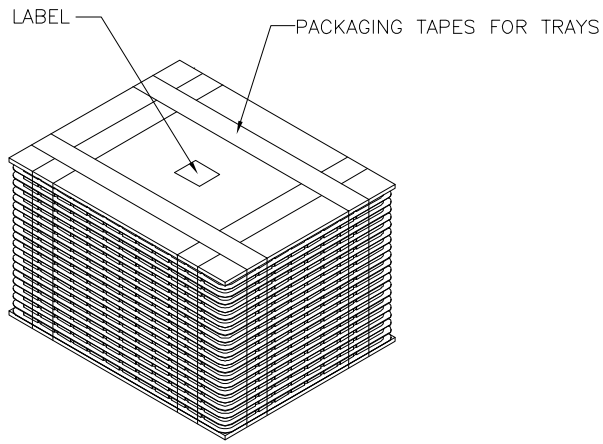

3. LABEL & PACKAGING TAPES FOR TRAYS:

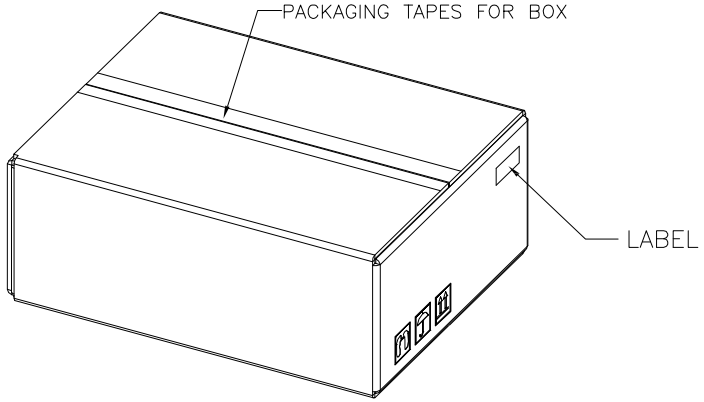

4. LABEL & PACKAGING TAPES FOR BOX

PACKAGING LISTS	
ITEM	Q'TY
PRODUCT	572 PCS
TRAY	44 PCS
BOX(L340*W265*H200MM)	1 PCS
LABLE	2 PCS
PACKAGING TAPES	13 M (ABOUT)

RoHS

THIRD ANGLE PROJECTION	深圳市金航标电子有限公司 SHENZHEN KINGHELM ELECTRONIC CO.,LTD. www.kinghelm.com.cn 0755-28190160		
DO NOT SCALE DRAWING	TITLE		
DRAWING IS SUBJECT TO CHANGE WITHOUT NOTICE			
DIMENSIONS: mm(INCH) .X±0.20 .XXX±0.10 .XX±0.15	PART NO: KH-SFP-N1H-1G	DRN BY: TONY	DATE: 07-01-22
		APPD BY: JIM	DATE: 07-01-22
SHEET NO. 4 OF 4	Product: PCB JACK RJ45 RJ11 USB CONNECTOR SFP CONNECTOR TRANSFORMER	DWG NO: SFP10018	REV: A10