Kinghelm®

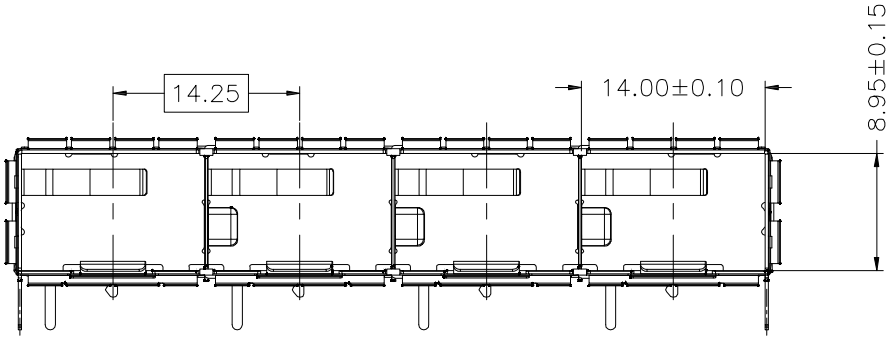

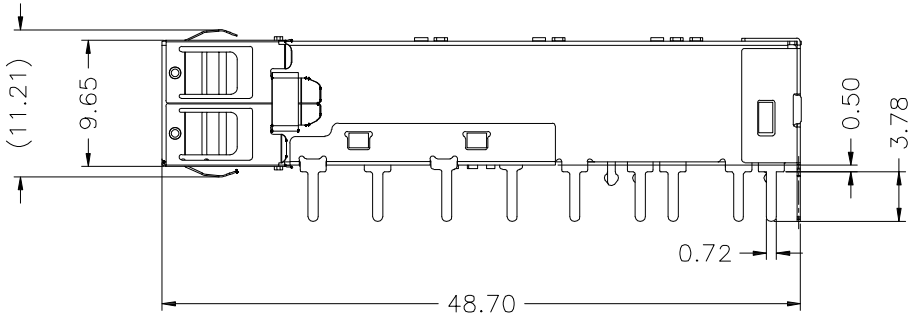

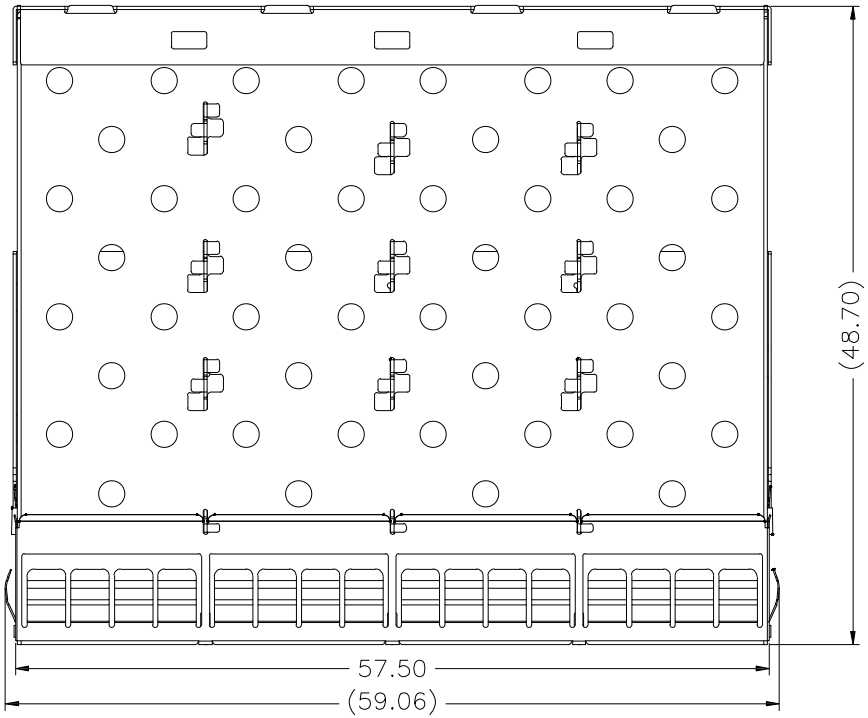

NOTES:
1.MATERIAL:
2.CAGE:STAINLESS STEEL,NI PLATING,THICKNESS 0.25mm
MIDDLE CAGE:STAINLESS STEEL
2.TEMPERATURE RANGE:
OPERATING:−40°C TO +85°C
NON OPERATING:−55°C TO +105°C

THIRD ANGLE PROJECTION	深圳市金航标电子有限公司 SHENZHEN KINGHELM ELECTRONIC CO.,LTD. www.kinghelm.com.cn 0755-28190160		
DO NOT SCALE DRAWING	TITLE		
DRAWING IS SUBJECT TO CHANGE WITHOUT NOTICE			
DIMENSIONS: mm(INCH)	PART NO: KH-SFP-N4H-10G	DRN BY: TONY	DATE: 12-10-08
.X±0.30 .XX±0.25 .XXX±0.10	Product: PCB JACK RJ45 RJ11 USB CONNECTOR SFP CONNECTOR TRANSFORMER	APPD BY: JIM	DATE: 12-10-08
SHEET NO. 1 OF 4		DWG NO: SFP2203	REV: A10

Kinghelm®

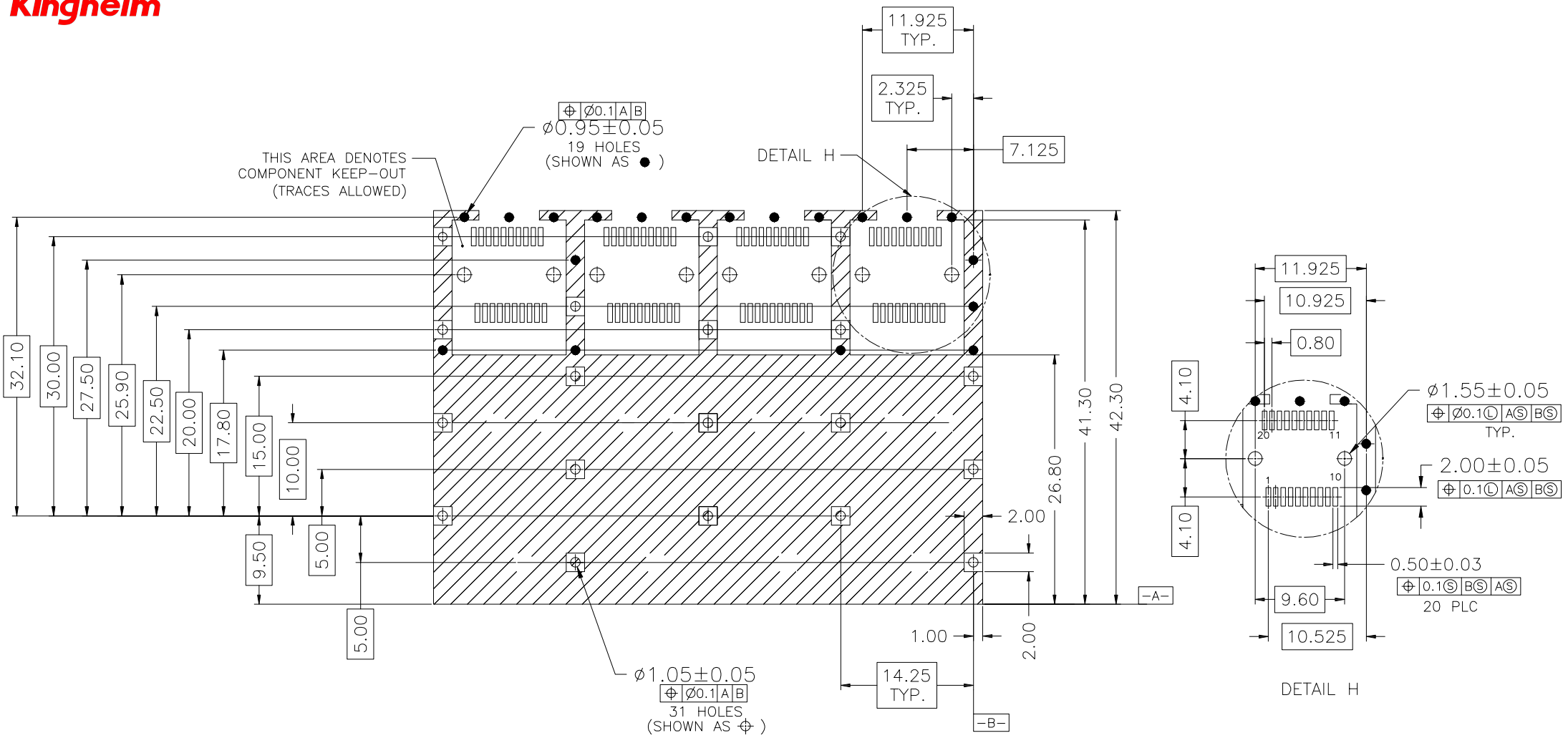

THIRD ANGLE PROJECTION	深圳市金航标电子有限公司 SHENZHEN KINGHELM ELECTRONIC CO.,LTD. www.kinghelm.com.cn 0755-28190160		
DO NOT SCALE DRAWING	TITLE		
DRAWING IS SUBJECT TO CHANGE WITHOUT NOTICE			
DIMENSIONS: mm(INCH)	PART NO: KH-SFP-N4H-10G	DRN BY: TONY	DATE: 12-10-08
.X±0.30 .XX±0.25 .XXX±0.10	Product: PCB JACK RJ45 RJ11 USB CONNECTOR SFP CONNECTOR TRANSFORMER	APPD BY: JIM	DATE: 12-10-08
SHEET NO. 2 OF 4		DWG NO: SFP2203	REV: A10

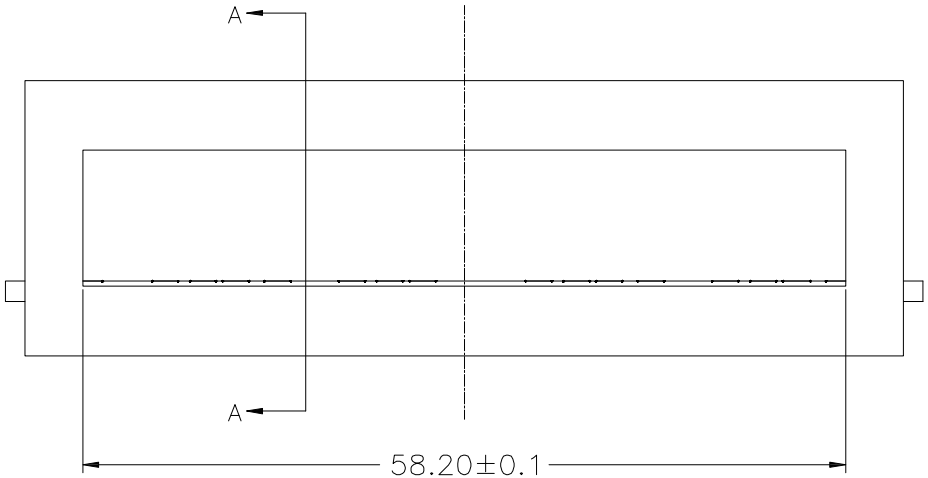

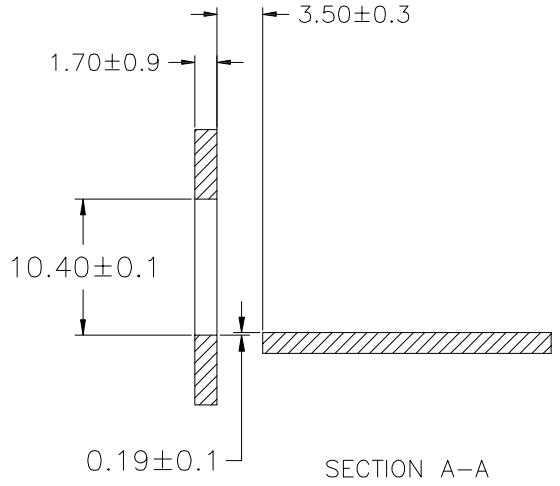

RECOMMENDED BEZEL DESIGN

THIRD ANGLE PROJECTION	深圳市金航标电子有限公司 SHENZHEN KINGHELM ELECTRONIC CO.,LTD. www.kinghelm.com.cn 0755-28190160		
DO NOT SCALE DRAWING	TITLE		
DRAWING IS SUBJECT TO CHANGE WITHOUT NOTICE			
DIMENSIONS: mm(INCH)	PART NO: KH-SFP-N4H-10G	DRN BY: TONY	DATE: 12-10-08
.X±0.30 .XX±0.25 .XXX±0.10	Product: PCB JACK RJ45 RJ11 USB CONNECTOR SFP CONNECTOR TRANSFORMER	APPD BY: JIM	DATE: 12-10-08
SHEET NO. 3 OF 4		DWG NO: SFP2203	REV: A10

Kinghelm®

PACKAGE INFORMATION AND LABLE

1

图周用订书针订紧

吸塑盒

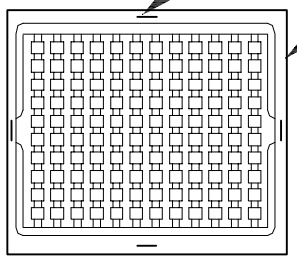

每吸塑盒放16PCS产品

2

用拉伸膜“十”字型扎紧

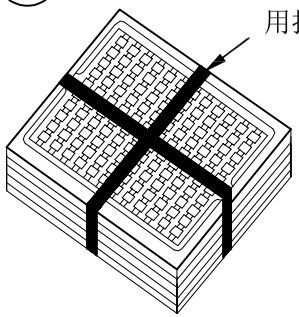

8吸塑盒为一叠

3

每箱放8盒吸塑盒，
（共8盒128PCS产品）

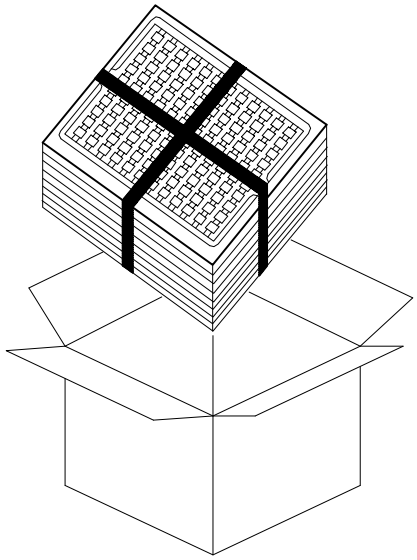

4

封箱胶纸封箱

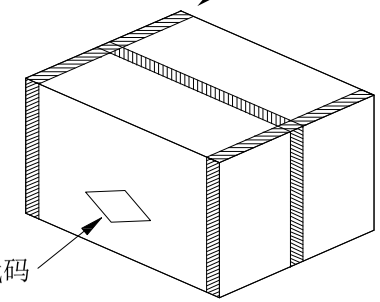

客户代码

PACKING QUANTITY : 16 PCS FINISHED GOODS PER TRAY
8 TRAYS (128 PCS FINISHED GOODS) PER CARTON BOX

NOTE : CARDBOARDS ARE PLACED BETWEEN LAYERS OF PACKING TRAY
(INCLUDE THE UPPERMOST AND LOWERMOST TRAY)

THIRD ANGLE PROJECTION	深圳市金航标电子有限公司 SHENZHEN KINGHELM ELECTRONIC CO.,LTD. www.kinghelm.com.cn 0755-28190160		
DO NOT SCALE DRAWING	TITLE		
DRAWING IS SUBJECT TO CHANGE WITHOUT NOTICE			
DIMENSIONS: mm(INCH)	PART NO: KH-SFP-N4H-10G	DRN BY: TONY	DATE: 12-10-08
.X±0.30 .XX±0.25 .XXX±0.10	Product: PCB JACK RJ45 RJ11 USB CONNECTOR SFP CONNECTOR TRANSFORMER	APPD BY: JIM	DATE: 12-10-08
SHEET NO. 4 OF 4		DWG NO: SFP2203	REV: A10