New Molde Code	Old Molde Code
GT-3AF006A-BXNBXX-XX	GT-USB-3001-XXGX

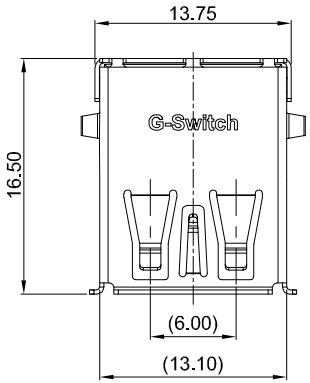

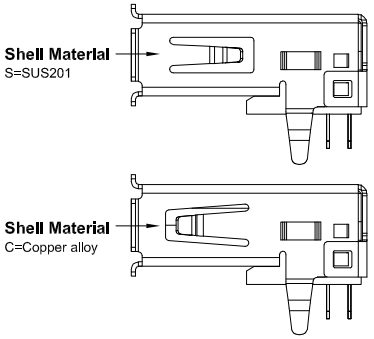

PIN ASSIGNMENT

PIN	1	2	3	4	5	6	7	8	9
NAME	VBUS	DM-	DP+	GND	RX-	RX+	GND	TX-	TX+

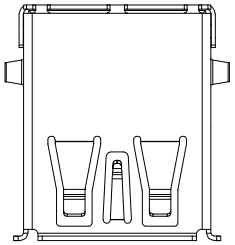

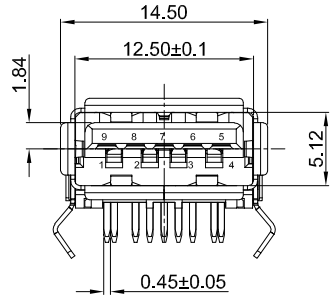

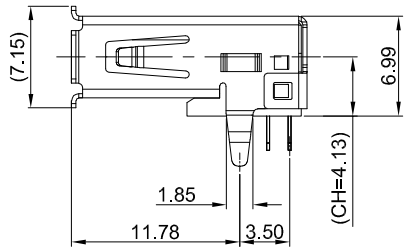

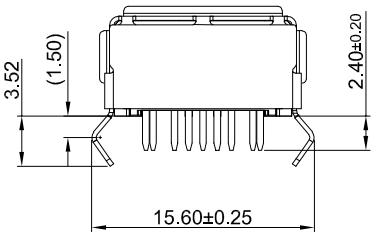

GT - 3 AF 006 A - X C N B XX - XX

- **USB Version** — 3=USB3.0
- **USB Port Types** — AF=Type-A Female
- **Serial Code**
- **Specification** — A=Bent foot DIP
- **Detail** — B=With flanging no column
- **Shell Material** — S=SUS; C=Copper alloy; F=Ferroalloy
- **Shell Plated** — N=Ni
- **Housing Colour** — B=Blue(LCP); N=Black(LCP)
- **Contact Plated** — 00=G/F; 01=1μ"; 03=3μ"; 05=5μ"; 15=15μ"; 30=30μ"
- **Salt Spray** — 12=12H; 24=24H

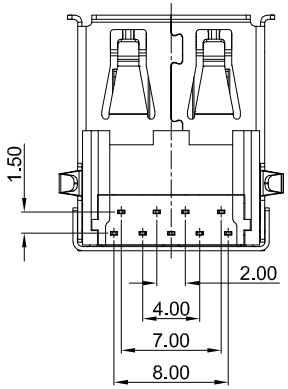

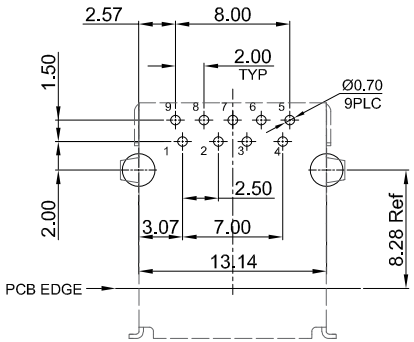

PCB REFERENCE DIAGRAM
TOLERANCE:±0.05

G-Switch USB-3.0 Type-A Specification:

1.Current rated: 1.8A Max
2.Voltage rating: 30V AC/DC
3.Dielectnic withstanding Voitage:500V AC
4.Contact resistance: 30mΩ Max
5.Insulation resistance: 1,000MΩ Min
6.Mating force: 35N Max,
7.Unmating force: 10N Min
8.Terminal Retenion: 1.2kgf Min
9.Durability cycle:1,500 cycles
10.Operating temperature: -40°C ~ +85°C

NO.	PARTS	MATERIAL	REMARKS
1	SHELL	C2680	Ni PLATED
2	HOUSING	LCP	BLUE UL 94V-0
3	TERMINALS	C5210	G/F PLATED ON CONTACT AREA Tin PLATED ON SOLDER AREA

Pb Process Capable — RoHS Compliant — EU RoHS Standards

SCALE: 1:1	UNIT: mm	Title:	Horizontal USB 3.0 AF DIP CH=4.13 L=16.48mm
SIZE: A4		Molde Code:	GT-3AF006A-BXNBXX-XX

Unless otherwise General Tolerance:

X.x	±0.30
X.xx	±0.20
X.xxx	±0.10
X.x°	±3°

DRAWN	CHECKED	APPROVED	DATE
Xia	Chen	Chen	2025.10.10

品赞科技 G-Switch ®
www.dg-switch.com

REV: A0 SHEET: 1/1