Kinghelm®

CUSTOMER DRAWING

RoHS Compliant

版次 REV.	ECN编号 ECN NUMBER	设变内容 MODIFICATION	日期 DATE	制图 DRAW	核准 APPROVE
A		初版发行	31-OCT-24'	DOREN	DDS

1.Mechanical:

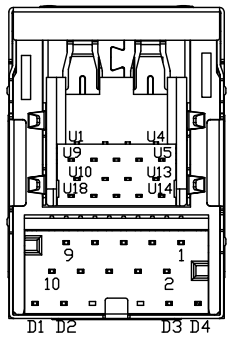

BOTTOM SIDE

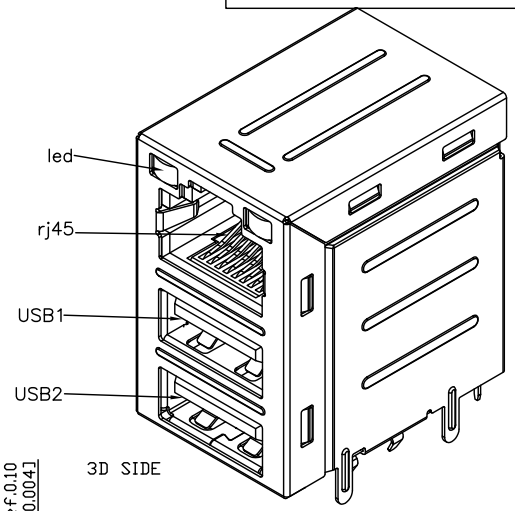

3D SIDE

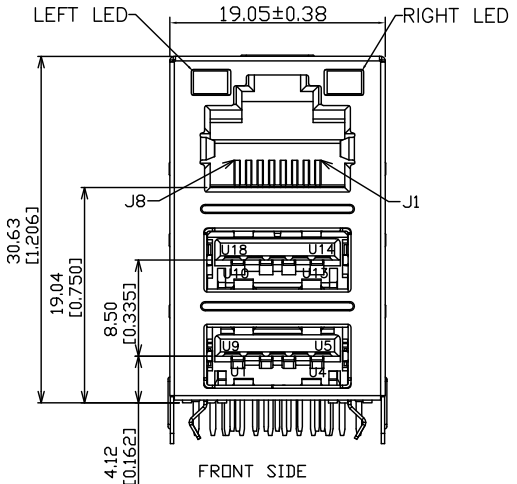

FRONT SIDE

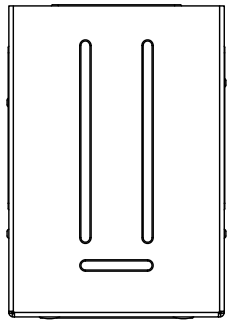

TOP SIDE

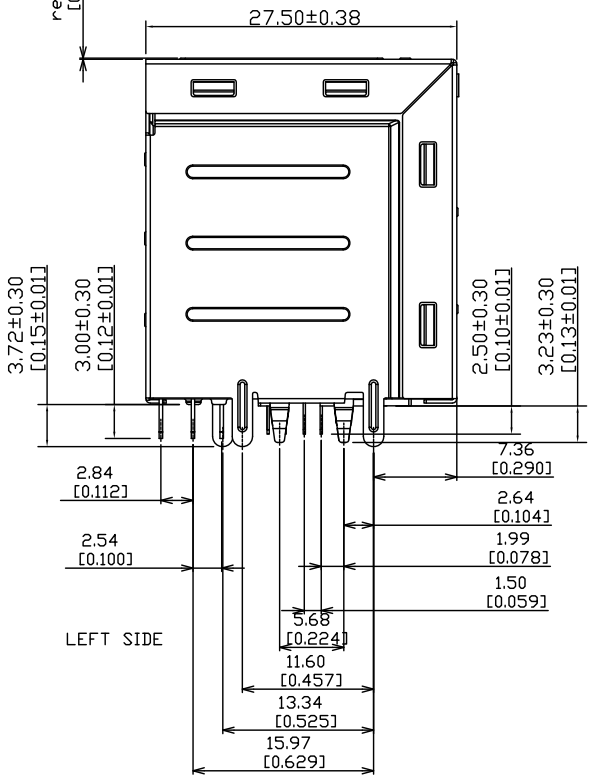

LEFT SIDE

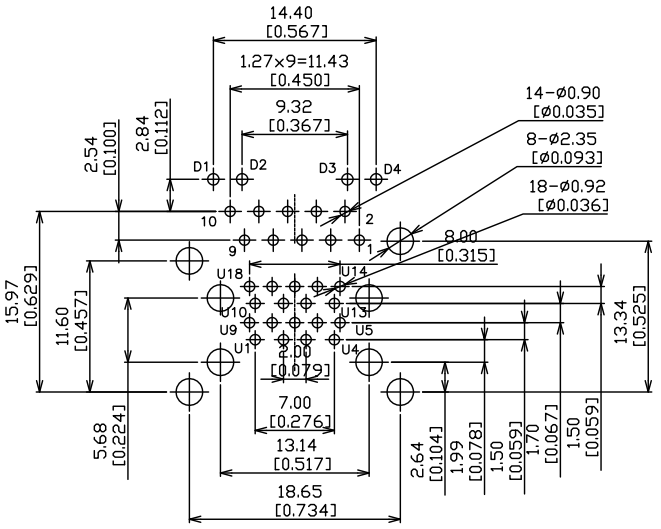

TOP VIEW (ALL TOLERANCE ARE:±0.05mm)
RECOMMENDED PCB LAYOUT (T=1.2~2.0mm)

3602 - 07 2 - XX

系列码
2xN

类别码
RJ+双层3.1USB 1000兆

流水码
09:无弹左绿橙右黄GF PBT黑 盘装

DIMENSION IN mm [Inch]		深圳市金航标电子有限公司 SHENZHEN KINGHELM ELECTRONIC CO.,LTD. www.kinghelm.com.cn 0755-28190160	
TOLERANCE UNLESS OTHERWISE SPECIFIED		料号 FILE NO. KH-RJ45-C3602-072-09	图号 DWG NO. C3602-072-09
.X± 0.35	X°.± 3°	名称 TITLE RJ45+双层USB3.1 无弹左绿橙右黄DIP 1000兆	
.XX± 0.25	.X°± 2°		
.XXX± 0.15	.XX°± 1°		
核准 APPROVE ZILL	审核 CHECK DDS	制图 DRAW DOREN	角法 PROJ. 比例 SCALE 1:1 张数 SHEET 1/3 图纸 SIZE A4 版次 REV A

Kinghelm®

CUSTOMER DRAWING

RoHS Compliant

版次 REV.	ECN编号 ECN NUMBER	设变内容 MODIFICATION	日期 DATE	制图 DRAW	核准 APPROVE
A		初版发行	31-OCT-24'	DOREN	DDS

3.Schematic :

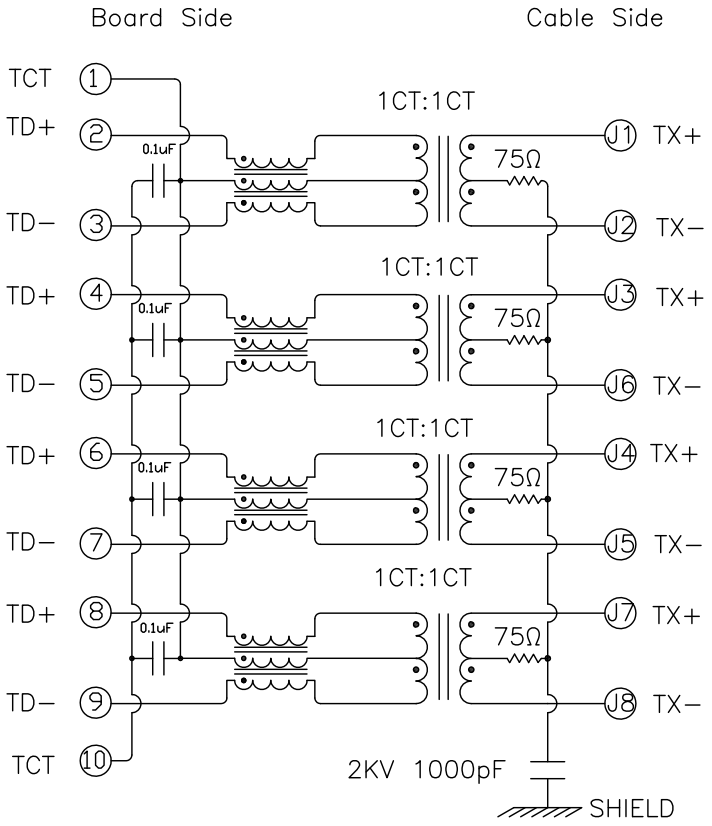

Item	Specification	Test Condition
Application	1000 Base-T	
OCL	350uH Min	100KHz 0.1V 8mA DC Bias @ 0°C to 70°C
Leakage Inductance	0.4uH Max	100KHz 0.1V
DC Resistance	1.2 Ω Max	
Turn Ratio	1CT:1CT	100KHz 0.1V
Insertion Loss	-1.1dB Min	0.5-100 MHz
Return Loss	-16dB Max	0.5-30 MHz
	-10+20log(f/80)dB Max	30.1-60 MHz
	-10dB Max	60.1-80 MHz
Cross Talk	-35dB Max	0.5-40 MHz
	-33+20log(f/50)dB Max	40.1-100 MHz
CMRR	-30dB Max	0.5-100 MHz
Hi-pot Test (4pairs)	1mA Max	2250VDC
Operating Temperature	0°C ~ +70°C	
Storage Temperature	-40°C ~ +85°C	

4.LED specification :

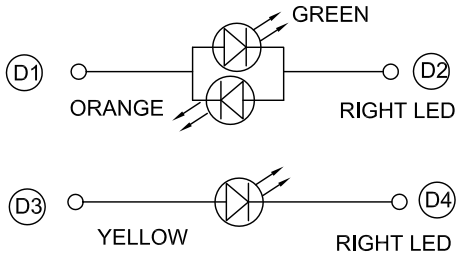

LED Color	λ P(nm)	VF @IF=20mA	IR @VR=5V
GREEN	565	1.8~2.4 V	10 uA max
YELLOW	585	1.8~2.4 V	10 uA max
ORANGE	605	1.8~2.4 V	10 uA max

DIMENSION IN mm [Inch]

TOLERANCE UNLESS OTHERWISE SPECIFIED

.X± 0.35	X°.± 3°
.XX± 0.25	.X°± 2°
.XXX± 0.15	.XX°± 1°

深圳市金航标电子有限公司
SHENZHEN KINGHELM ELECTRONIC CO.,LTD.
www.kinghelm.com.cn 0755-28190160

料号 FILE NO. KH-RJ45-C3602-072-09

图号 DWG NO. C3602-072-09

名称 TITLE RJ45+双层USB3.1 无弹左绿橙右黄DIP 1000兆

核准APPROVE	审核 CHECK	制图 DRAW	角法 PROJ.	图纸 SIZE A4
ZILL	DDS	DOREN	比例 SCALE 1:1	张数 SHEET 2/3	版次 REV A

Kinghelm®

CUSTOMER DRAWING

RoHS Compliant

版次 REV.	ECN编号 ECN NUMBER	设变内容 MODIFICATION	日期 DATE	制图 DRAW	核准 APPROVE
A		初版发行	31-OCT-24'	DOREN	DDS

7.USB3.1 STANDARD-A CONNECTOR PIN ASSIGNMENTS:

PIN NUMBER	SIGNAL NAME	DESCRIPTION
1 10	VBUS	POWER
2 11	D-	USB2.0 DIFFERENTIAL PAIR
3 12	D+	
4 13	GND	GROUND FOR POWER RETURN
5 14	StdA_SSRX-	SUPERSPEED RECEIVER
6 15	StdA_SSRX+	DIFFERENTIAL PAIR
7 16	GND_DRAIN	GROUND FOR SIGNAL RETURN
8 17	StdA_SSTX-	SUPERSPEED TRANSMITTER
9 18	StdA_SSTX+	DIFFERENTIAL PAIR

8.RJ45 CONNECTOR PIN ASSIGNMENTS:

PIN NUMBER	SIGNAL NAME	DESCRIPTION
J1	TX_D1 +	TRANCEIVE DATA+ (发信号+)
J2	TX_D1 -	TRANCEIVE DATA- (发信号-)
J3	RX_D2 +	RECEIVE DATA+ (收信号+)
J4	BI_D3 +	BI-DIRECTIONAL DATA+（双向数据+）
J5	BI_D3 -	BI-DIRECTIONAL DATA-（双向数据−）
J6	RX_D2 -	RECEIVE DATA- (收信号−)
J7	BI_D4 +	BI-DIRECTIONAL DATA+（双向数据+）
J8	BI_D4 -	BI-DIRECTIONAL DATA-（双向数据−）

9.Notes :

RJ45
1.Designed to support application,such as SOHO(ADSL modems)
LAN-on-Motherboard(LOM),hub and Switches.
2.Meets IEEE802.3 specification.
3.Connector Material:
3-1.Housing&Insertion Base: Thermo plastics PBT+30%GF,UL94V-0.
4.RJ45 Terminal:
4-1.Phosphor Bronze C5191.Thickness=0.30mm.
4-2.6u Gold plating on RJ45 contact area.
4-3. Tin Plating 80u" on solder tail area
4-4.45u" min Ni underplating over all.
5.Shell: SUS .Thickness=0.25mm.Pre-soldering .
USB:
8.Material Specification:
8-1.Cover:PA66&PBT+30%G.F, UL94V-0.Color:blue.
8-2.Housing:PA66&PBT+30%G.F, UL94V-0.Color:blue.
8-3.Shell:SUS ,Thickness=0.25mm.
8-4.Contacts:Brass(C2680) T=0.20.
9.Plating Specification:
9-1.Contacts:Au G/Fu"& 80u"matte Tin plated & 50u"Nickel plated
9-2.Front Shell: 50u"MIN mattein Tin plating on solder tails over 20u"MIN Nickel
9-3.Middle Bullet:80u"Nickel plated & 50u"copper plated
10.Mechanical Performance.
10-1.Insertion Force:3.5Kgf MAX.
10-2.Extraction Force:1.0-3.5Kgf.
10-3.Durability:1500 cycles .
11.Elecirical Performance:
11-1.Insulation Resistance:100M MIN.
11-2.Delectric Withstand Voltage:AC 100V for 1 minute.
12.Wave Solder:
The Connector Shall Be mounted on the PCB.

DIMENSION IN mm [Inch]

TOLERANCE UNLESS OTHERWISE SPECIFIED

.X± 0.35	X°.± 3°
.XX± 0.25	.X°± 2°
.XXX± 0.15	.XX°± 1°

核准APPROVE ZILL | 审核 CHECK DDS | 制图 DRAW DOREN

深圳市金航标电子有限公司
SHENZHEN KINGHELM ELECTRONIC CO.,LTD.
www.kinghelm.com.cn 0755-28190160

料号 FILE NO. KH-RJ45-C3602-072-09

图号 DWG NO. C3602-072-09

名称TITLE RJ45+双层USB3.1 无弹左绿橙右黄DIP 1000兆

角法 PROJ. | 图纸 SIZE A4 | 比例 SCALE 1:1 | 张数 SHEET 3/3 | 版次 REV A