Kinghelm®

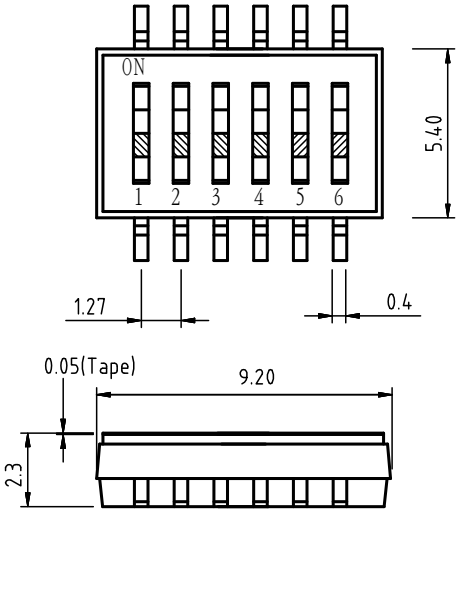

◆SCHEMATIC

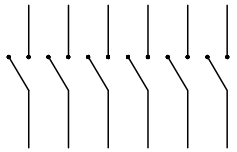

◆P.C.B LAYOUT

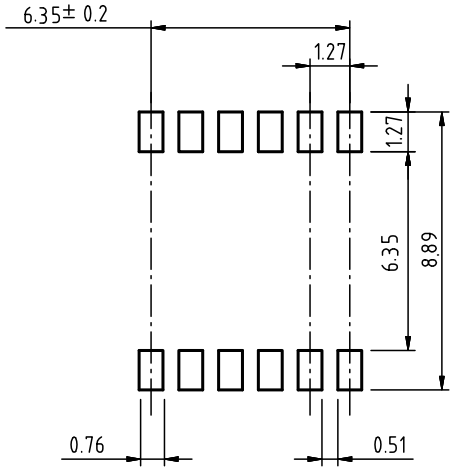

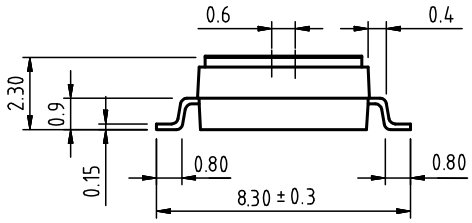

Poles(N) A Dimension(mm)

01	2.87
02	4.12
03	5.41
04	6.66
05	7.93
06	9.20
08	11.74
10	14.28
TOLERANCE:±0.1mm	

◆STRUCTURE

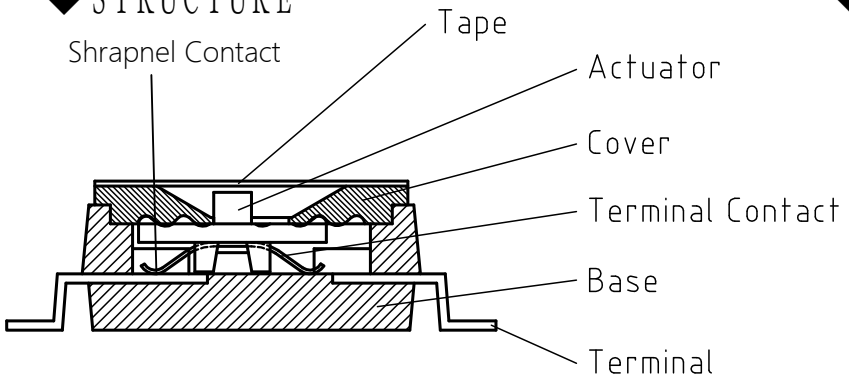

◆MATERIAL

Part Name	Material	Finished
Base	PPS UL94 V0	Black
Cover	PPS UL94 V0	Black
Actuator	Nylon UL94 V0	White
Shrapnel Contact	Beryllium	3μ" Gold
Terminal Contact	Brass	1μ" Gold
Terminal	Brass	1μ" Gold
Tape	Polyimide	Amber

深圳市金航标电子有限公司
www.kinghelm.com.cn 0755-28190160

Tolerance		Drawing		Date	01/02/06	Remark:	Product	DSHP Series
0.1 - 1.0 : ±0.05 1.0 - 5.00 : ±0.1 5.00 - 10.00 : ±0.2 10.00 - 20.00 : ±0.3		Design		Ratio	4:1		P/N	KH-BM-SMT1.27-3P
		Check		Unit	mm		Drawing No.	DSP-DSHPXXTSGER-AP
		Approved						