Kinghelm®

CUSTOMER DRAWING

RoHS Compliant

版次 REV.	ECN编号 ECN NUMBER	设变内容 MODIFICATION	日期 DATE	制图 DRAW	核准 APPROVE
A		初版发行	21-MAR-22	DOREN	DDS
B		UPDATE	12-AUG-26	DOREN	DDS

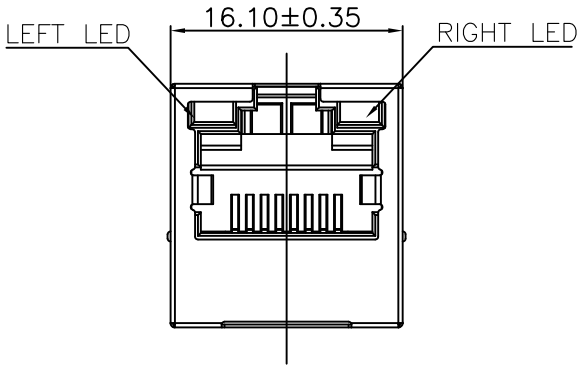

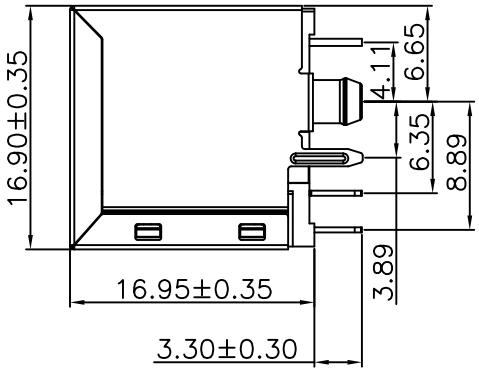

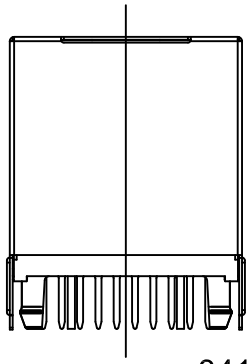

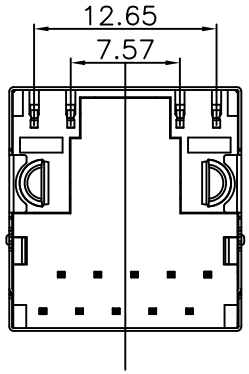

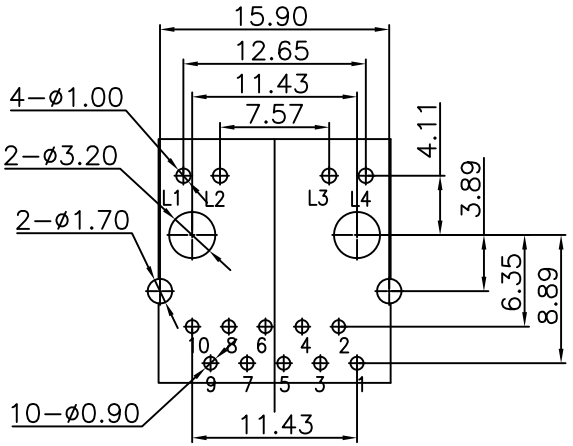

Recommended PCB Layout
(Tolerance:±0.05)

1.Material:
- 1.1 Housing: PBT UL94V−0 Black.
  Insert: PBT UL94V−0 Black.
- 1.2 Shell: 30u″ ~50u″ Ni Over Stainless steel(SUS 201), T=0.20mm.
- 1.3 RJ45 Terminal:Phosphor Bronze(C5210) T=0.35mm
  Plating:6u″ Gold Plated On Contact Area,
  80u″ ~120u″ Tin Plated On Solder Area,
  30u″ ~50u″ Ni Underplated Overall.
- 1.4 Tail Terminal: Brass(C2680) T=0.35mm,
  Plating: 80u″ ~120u″ Tin Plated Over,
  30u″ ~50u″ Ni Underplated Overall.

2.Environmental requirements:
- 2.1 Lead−free process,compliant RoHS.

3418 - 06 2 - 02

系列码

类别码
RJ45立式1000兆

流水码
02:无弹左黄右绿6u" PBT黑 盘装

DIMENSION IN mm [Inch]		深圳市金航标电子有限公司 SHENZHEN KINGHELM ELECTRONIC CO.,LTD. www.kinghelm.com.cn 0755-28190160	
TOLERANCE UNLESS OTHERWISE SPECIFIED		料号 FILE NO. KH-RJ45-C3418-062-02	图号 DWG NO. C3418-062-02
.X± 0.35	X°.± 3°	名称 TITLE RJ45立式有壳左黄右绿DIP B3.89 1000兆	
.XX± 0.25	.X°± 2°		
.XXX± 0.15	.XX°± 1°		
核准 APPROVE ZILL	审核 CHECK DDS	制图 DRAW DOREN	角法 PROJ. 图纸 SIZE A4
			比例 SCALE 1:1 张数 SHEET 1/2 版次 REV B

Kinghelm®

CUSTOMER DRAWING

RoHS Compliant

版次 REV.	ECN编号 ECN NUMBER	设变内容 MODIFICATION	日期 DATE	制图 DRAW	核准 APPROVE
A		初版发行	21-MAR-22	DOREN	DDS
B		UPDATE	12-AUG-26	DOREN	DDS

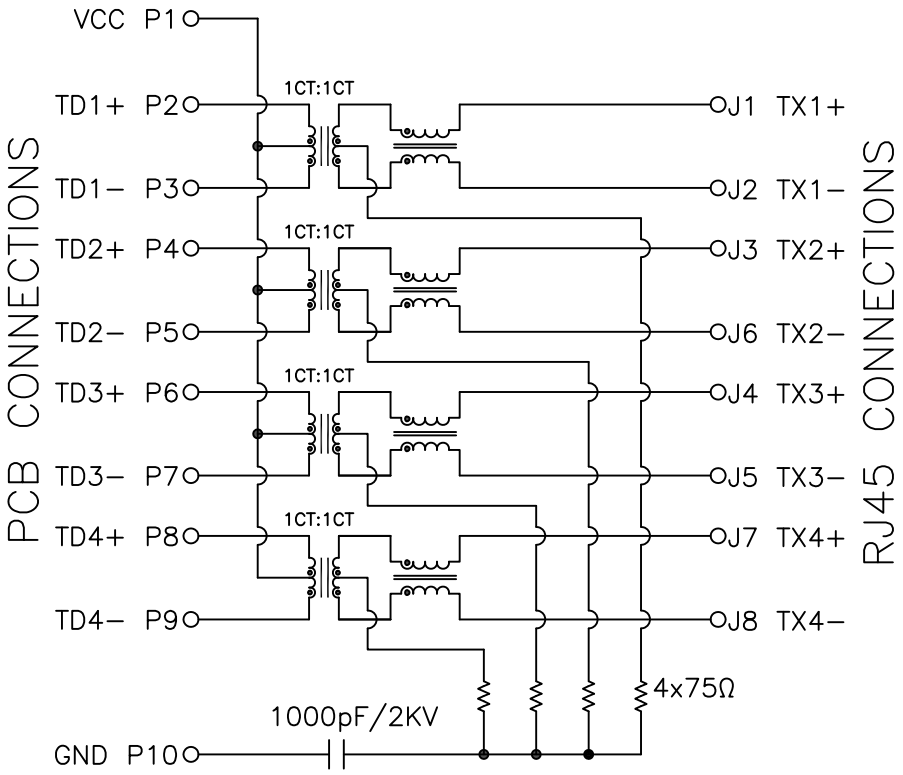

3.Electrical Specification @25°C:
- 3.1 Inductance: 350uH Min With 8mA DC bias.
- 3.2 Insertion loss :
  - 1−100MHZ −1dB max.
- 3.3 Return loss :
  - 1−30MHZ −18dB min.
  - 30−60MHZ −16dB min.
  - 60−80MHZ −12dB min.
- 3.4 Common Mode Rejection:1−100MHZ −30dB min.
- 3.5 Cross Talk:1−100MHZ −30dB min.

4.Operating and Storage Temperature:
- 4.1 Operating Temperature : −40°C to +85°C.
- 4.2 Storage Temperature : −40°C to +85°C.

5.Wave soldering peak temperature:260°C.

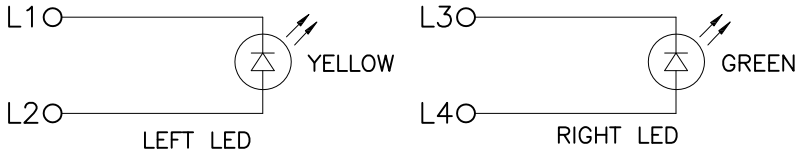

Emitting Color	λp(nm)	Vf@If=20mA
Green	565	1.8−2.5V
YELLOW	585	1.8−2.5V

DIMENSION IN mm [Inch]	深圳市金航标电子有限公司 SHENZHEN KINGHELM ELECTRONIC CO.,LTD. www.kinghelm.com.cn 0755-28190160
TOLERANCE UNLESS OTHERWISE SPECIFIED	料号 FILE NO. KH-RJ45-C3418-062-02 / 图号 DWG NO. C3418-062-02
.X± 0.35 X°.± 3°	
.XX± 0.25 .X°± 2°	名称 TITLE RJ45立式有壳左黄右绿DIP B3.89 1000兆
.XXX± 0.15 .XX°± 1°	
核准 APPROVE ZILL / 审核 CHECK DDS	制图 DRAW DOREN / 角法 PROJ. / 图纸 SIZE A4
	比例 SCALE 1:1 / 张数 SHEET 2/2 / 版次 REV B