

RECOMMENDED PCB LAYOUT
TOLERANCE:±0.05



SS-23D03-GXXX

SS:Straight shank

G-Switch P/N

Switch Height (㎜)

G030=3.0	G040=4.0
G050=5.0	G060=6.0
G070=7.0	G080=6.0
G090=9.0	G100=10.0
G110=11.0	G120=12.0
G130=13.0	G140=14.0
G150=15.0	

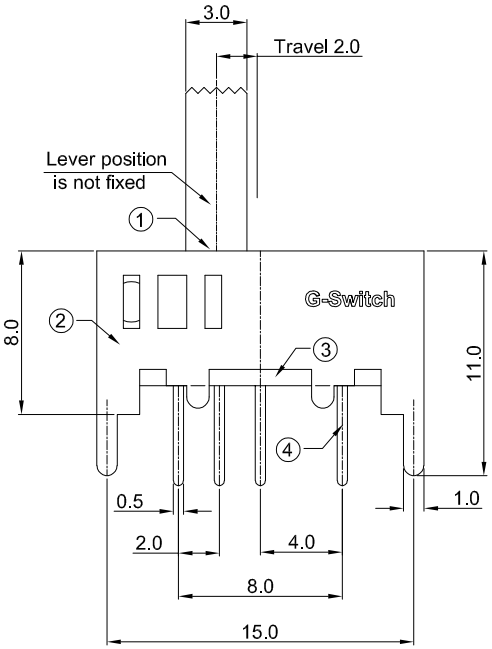

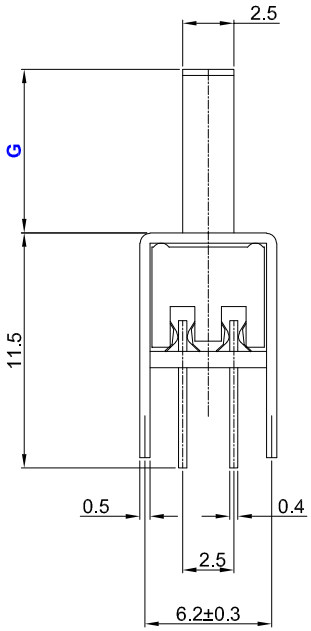

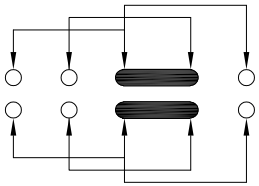

CIRCUIT DIAGRAM

G-Switch Specification:

1.Operating temperature range: -40°C ~ +85°C
2.Rating: 0.3A.50V DC
3.Insulation resistance: 100MΩ min 500V DC
4.Dielectric strength: 500V AC for 1 min
5.Contact resistance: 100mΩ max.
6.Travel: 2.0±0.3mm
7.Switch lifetime: 10,000Cycles

NO.	PART NAME	MATERIAL	REMARK
7	STEEL BALL	STEEL	CLEAN
6	SPRING	STEEL WIRE	CLEAN
5	CONTACT	PBS C2510R-EH	Ag PLATING
4	TERMINAL	BRASS STRIP	Ag PLATING
3	BASE	PHENOLIC RESIN	NATURAL
2	FRAME	STEEL STRIP	Ni PLATING
1	KNOB	PA66	BLACK

Pb Process Capable
RoHS Compliant
EU RoHS Standards

SCALE:	UNIT: mm	Title:	Vertical Slide Switch DIP 16×6.7×Hmm
SIZE: A4			
Unless otherwise General Tolerance: X ±0.40, X.x ±0.30, X.xx ±0.20, X° ±5°, X.x° ±3°		Molde Code:	SS-23D03-GXXX
DRAWN: Lal	CHECKED: Chen	APPROVED: Chen	DATE: 2025.10.29
REV: A0		SHEET: 1/1	

品赞科技 G-Switch www.dg-switch.com

1:1