

SECTION A-A

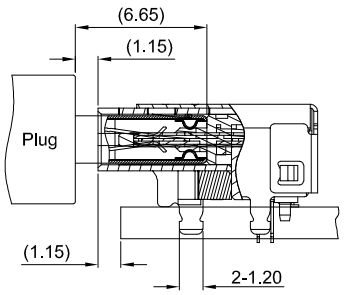

AFTER MATING

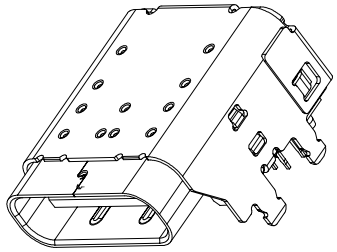

GT-USB-9065A01-XX XX

Serial Code

Configure
01-Standard Version
02-High-End Version

Contact Plated
00=G/F
01=1μ"
03=3μ"
05=5μ"
15=15μ"
30=30μ"

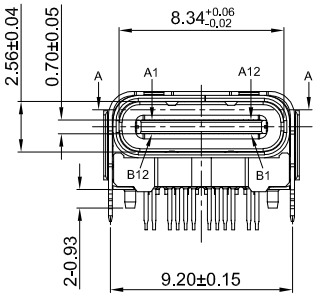

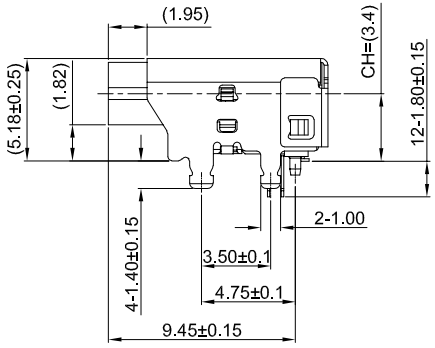

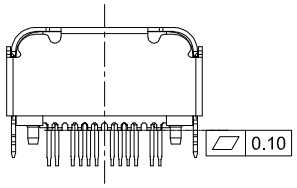

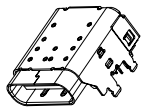

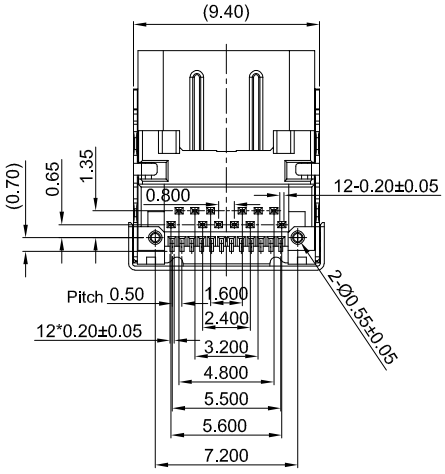

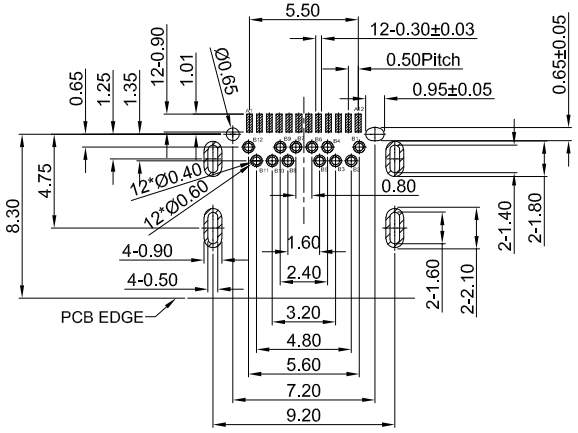

PCB REFERENCE DIAGRAM
TOLERANCE:±0.05

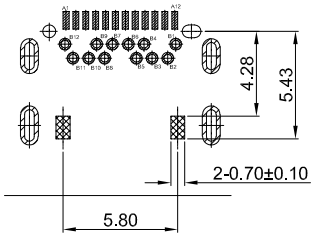

STAND OFF AREA
PAD AREA

G-Switch USB-C Specification:

1.Current rated: 5A on vbus/1.25A on vconn/0.25A on other
Voltage rating: 20V AC/DC
2.Withstanding voltage: 100V AC/minute
3.Contact resistance: 40mΩ Max
4.Insulation resistance: 100MΩ Min
5.Operating temperature: -40°C ~ +85°C
6.Mating force: 5N~20N
7.Unmating force: 8N~20N,after durability test: 6N~20N
8.Durability cycle:10,000 cycles
9.Data transmission rate up to 10/40Gbps
10.Compliant with: IEC62680-1-3

A1	A2	A3	A4	A5	A6	A7	A8	A9	A10	A11	A12
GND	TX1+	TX1-	VBUS	CC1	D+	D-	SBU1	VBUS	RX2-	RX2+	GND
First	Second	Second	First	Second	Second	Second	Second	First	Second	Second	First
B12	B11	B10	B9	B8	B7	B6	B5	B4	B3	B2	B1
GND	RX1+	RX1-	VBUS	SBU2	D-	D+	CC2	VBUS	TX2-	TX2+	GND
First	Second	Second	First	Second	Second	Second	Second	First	Second	Second	First

NO.	PARTS	MATERIAL	REMARKS
1	OUT SHELL	STAINLESS STEEL304	Ni30μ"MIN PLATED
2	IN SHELL	STAINLESS STEEL304	Ni30μ"MIN PLATED
3	MID PLATE	STAINLESS STEEL301	——
4	HOUSING	LCP/LCP6808	BLACK UL 94V-0
5	TERMINALS	C7025/NKE012	Au PLATED ON CONTACT AREA G/F PLATED ON SOLDER AREA

Pb Process Capable

RoHS Compliant EU RoHS Standards

Compliant Halogen Free

SCALE: 1:1	UNIT: mm	Title:	Horizontal Type-C 24P Female DIP+SMT Pad UP1.82 CH=3.40 L=11.10mm
SIZE: A4		Molde Code:	GT-USB-9065A01-XXXX

Unless otherwise General Tolerance:

X.	±0.40
X.x	±0.30
X.xx	±0.20
X.xxx	±0.10
X°	±5°

DRAWN	CHECKED	APPROVED	DATE
Xia	Chen	Chen	2025.07.30

品赞科技 b-Switch ®
www.dg-switch.com

REV: A0 SHEET: 1/1

品赞电子（东莞）有限公司