© – TE Connectivity. All Rights Reserved.

REVISIONS					
P	LTR	DESCRIPTION	DATE	DWN	APVD
	B2	REVISED PER ECR-22-161539	24MAR2023	GC	WH

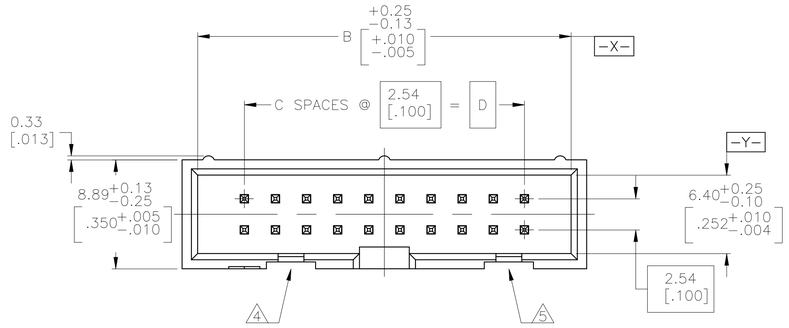

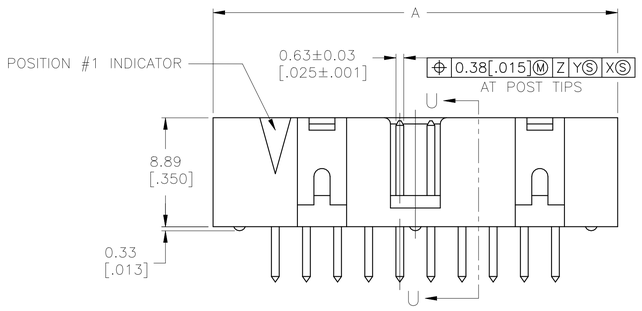

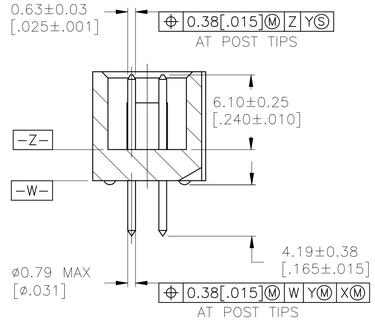

SECTION U–U

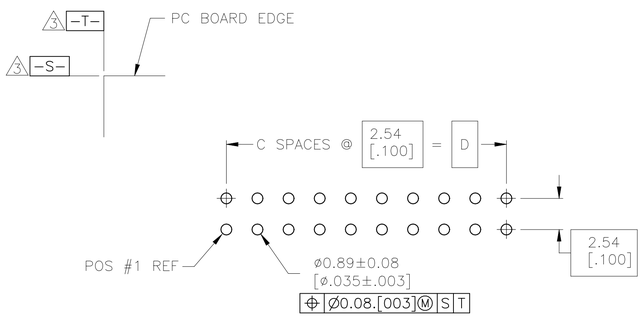

RECOMMENDED PC BOARD LAYOUT
(VIEWED FROM CONNECTOR SIDE)

1. HOUSING: PBT, UL94V–0, COLOR: (SEE TABLE).
   POSTS: PHOSPHOR BRONZE/BRASS
2. POSTS: 0.00076[.000030] MIN GOLD ON MATING AREA, 0.00254[.000100] MIN TIN ON SOLDER END, ALL OVER 0.00127[.000050] MIN NICKEL ON ENTIRE POST.
3. DATUMS S & T TO BE ESTABLISHED BY CUSTOMER.
4. NO KEYING SLOT ON THIS END FOR 6, 10 & 14 POSITION ASSEMBLIES.
5. NO KEYING SLOT ON THIS END FOR 6 & 10 POSITION ASSEMBLIES.

	HOUSING COLOR	D	C	B	A	NO OF POS	PART NUMBER
	BLUE	78.74 [3.100]	31	86.36 [3.400]	88.90 [3.500]	64	3-1761679-7
		73.66 [2.900]	29	81.28 [3.200]	83.82 [3.300]	60	3-1761679-6
OBSOLETE		60.96 [2.400]	24	68.58 [2.700]	71.12 [2.800]	50	3-1761679-5
OBSOLETE		48.26 [1.900]	19	55.88 [2.200]	58.42 [2.300]	40	3-1761679-3
OBSOLETE		43.18 [1.700]	17	50.80 [2.000]	53.34 [2.100]	36	3-1761679-2
		40.64 [1.600]	16	48.26 [1.900]	50.80 [2.000]	34	3-1761679-1
		30.48 [1.200]	12	38.10 [1.500]	40.64 [1.600]	26	2-1761679-9
OBSOLETE		27.94 [1.100]	11	35.56 [1.400]	38.10 [1.500]	24	2-1761679-8
		22.86 [.900]	9	30.48 [1.200]	33.02 [1.300]	20	2-1761679-7
		17.78 [.700]	7	25.40 [1.000]	27.94 [1.100]	16	2-1761679-6
		15.24 [.600]	6	22.86 [.900]	25.40 [1.000]	14	2-1761679-5
		10.16 [.400]	4	17.78 [.700]	20.32 [.800]	10	2-1761679-3
		5.08 [.200]	2	12.70 [.500]	15.24 [.600]	6	2-1761679-1
	BLACK	30.48 [1.200]	12	38.10 [1.500]	40.64 [1.600]	26	1761679-9
		10.16 [.400]	4	17.78 [.700]	20.32 [.800]	10	1761679-3

THIS DRAWING IS A CONTROLLED DOCUMENT.

DIMENSIONS: mm

TOLERANCES UNLESS OTHERWISE SPECIFIED:
0 PLC ± –
1 PLC ± –
2 PLC ± –
3 PLC ± 0.13[.005]
4 PLC ± –
ANGLES ± –

MATERIAL 1

FINISH 2

DWN B.CRISAMORE/DTI 23MAY05
CHK S.BOLASH 23MAY05
APVD M.WALMSLEY 23MAY05

PRODUCT SPEC –

APPLICATION SPEC –

WEIGHT 0.000000

CUSTOMER DRAWING

TE Connectivity

NAME HEADER ASSEMBLY, VERTICAL, LOW PROFILE, IDC

SIZE	CAGE CODE	DRAWING NO	RESTRICTED TO
A1	00779	C-1761679	–

SCALE 4:1 SHEET 1 OF 1 REV B2