深圳市晶科鑫实业有限公司

样品承认书

客户代码：	
物料名称：	贴片钟振
规格型号：	SMD3225 OSC 32.000MHZ 3.3V LVCMOS -40~85℃
P N/ SJK：	3N32000G33YC
环保属性：	■RoHS ■REACH ■HF □PAHS □其它
版 次：	A1 2017-5-10 初版
湿敏等级：	一级

承 认 签 章					
供 应 商 承 认			（ ）公 司 承 认		
制定	审 核	核 准	工 程 师	审 核	批 准
贺丹斌	李相同	刘惠光			
SJK 支持			盖章签署		
FAE_EMAIL			日 期		
日 期					
备注：					

电话：0755-82507042 传真：0755-88353718 http://www.q-crystal.com.cn
公司地址: 深圳市龙岗区天安云谷产业园一期 3 栋 C 座 12 楼 1204～1206 室

1. ELECTRICAL SPECIFICATIONS

Standard atmospheric conditions

Unless otherwise specified, the standard range of atmospheric conditions for making measurement and tests are as follow:

Ambient temperature : 25±5℃

Relative humidity : 40%~70%

If there is any doubt about the results, measurement shall be made within the following limits:

Ambient temperature : 25±3℃

Relative humidity : 40%~70%

Measure equipment

Electrical characteristics measured by MD 37WX-05M or equivalent.

Crystal cutting type

The crystal is using AT CUT (thickness shear mode).

	Parameters		SYM	Electrical Spec.				Notes
				MIN	TYPE	MAX	UNITS	
1	Nominal Frequency			32.000000			MHZ	
2	Frequency Stability	AT 25℃		±10			PPM	
		Over Operating Temperature range		±20			PPM	-40～85℃
3	Operating Temperature		Topr	-40	25	85	℃	
4	Storage Temperature		Tstg	-55	~	125	℃	
5	Supply Voltage		VDD	3.3 / ±10%			V	**1.62~3.63 available**
6	Input Current		Icc			5	mA	
7	Enable Control			Yes				Pad1
8	Output Load : CMOS		CL	15			pF	
9	Output Voltage High		VoH	90% Vdd			V	
10	Output Voltage Low		VoL			10% Vdd	V	
11	Rise Time		Tr			5	ns	10%→ 90%VDD Level
12	Fall Time		Tf			5	ns	90%→ 10%VDD Level
13	Symmetry (Duty ratio)		TH/T	45	~	55	%	
14	Start-up Time		Tosc			10	ms	
15	Enable Voltage High		Vhi	70% Vdd			V	
16	Disable Voltage Low		Vlo			30% Vdd	V	
17	Aging			±3			ppm/yr.	1st. Year at 25℃
18	Output Disable Delay Time		T off			150	us	
19	Output Enable Delay Time		T on			150	us	

电话：0755-82507042 传真：0755-88353718 http://www.q-crystal.com.cn

公司地址: 深圳市龙岗区天安云谷产业园一期 3 栋 C 座 12 楼 1204～1206 室

20	Phase Jitter （12KHZ~20MHZ）			0.5	1.0	ps	

2. DIMENSIONS (Units :mm)

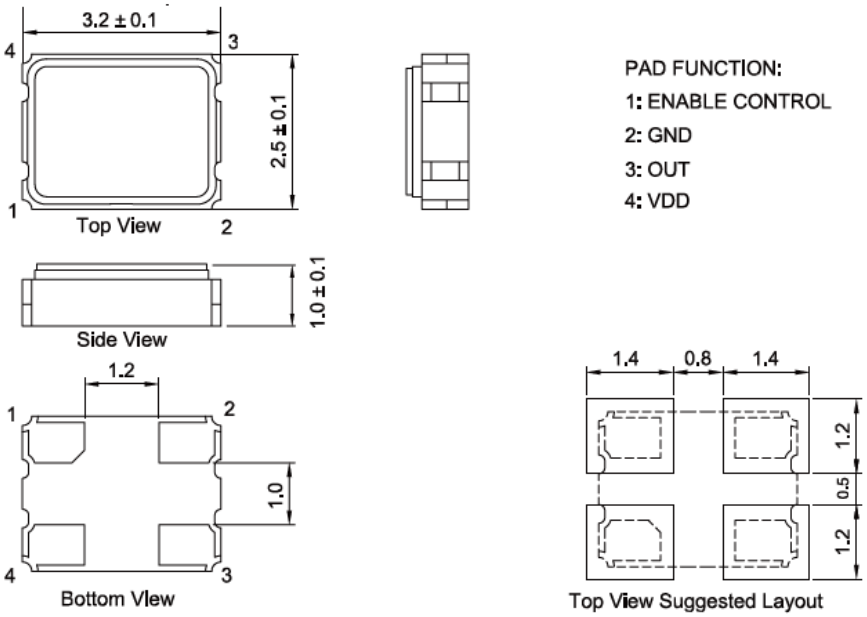

3. MARKING

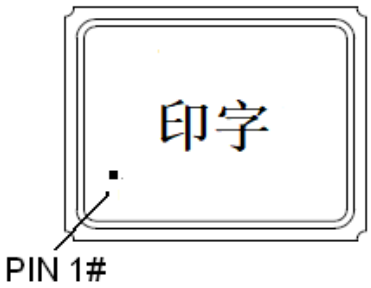

4. TEST CIRCUIT

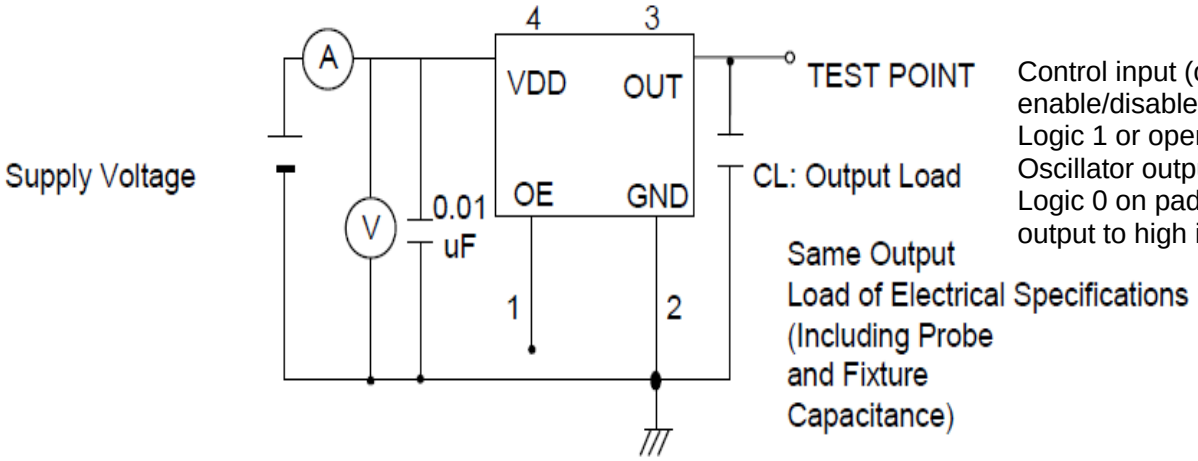

电话：0755-82507042 传真：0755-88353718 http://www.q-crystal.com.cn
公司地址: 深圳市龙岗区天安云谷产业园一期 3 栋 C 座 12 楼 1204～1206 室

5. WAVEFORM CONDITIONS

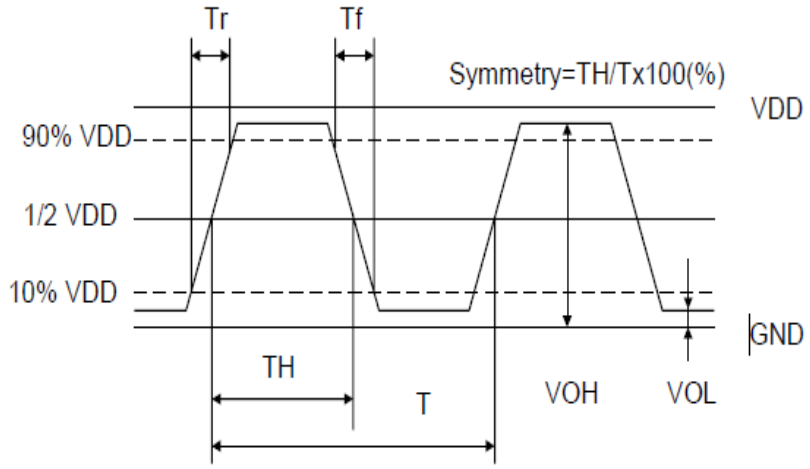

Waveform measurement system should have a min. bandwidth of 5 times the frequency being tested.

6. OUTPUT ENABLE / DISABLE DELAY

The following figure shows the oscillator timing during normal operation . Note that when the device is in standby,
the oscillator stops. When standby is released, the oscillator starts and stable oscillator output occurs after a short delay

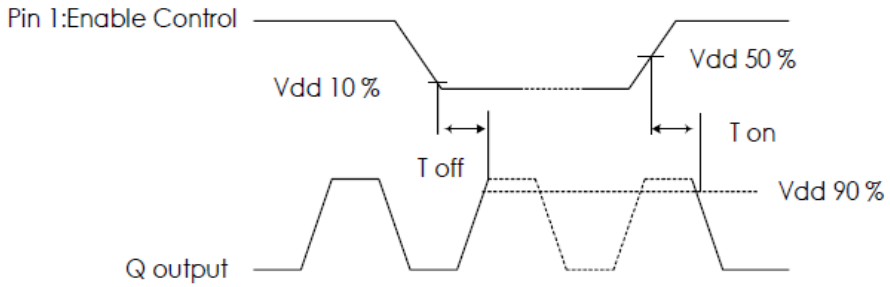

7. SUGGESTED REFLOW PROFILE

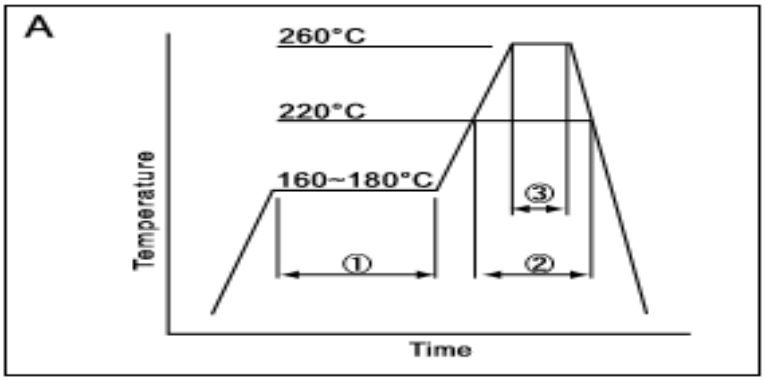

①	Preheat	160~180°C	120sec.
②	Primary heat	220°C	60sec.
③	Peak	260°C	10sec. max

Total time : 200 sec. Max / Solder melting point :220 ℃

电话：0755-82507042 传真：0755-88353718 http://www.q-crystal.com.cn
公司地址: 深圳市龙岗区天安云谷产业园一期 3 栋 C 座 12 楼 1204～1206 室

8. RELIABILITY TEST SPECIFICATION

1.Mechanical Endurance

No.	Test Item	Test Methods	REF. DOC
1	Drop Test	75 cm height,3 times on concrete floor .	JIS C6701
2	Mechanical Shock	Device are shocked to half sine wave (1000 G) three mutually perpendicular axes each 3 times. 0.5m sec. duration time	MIL-STD-202F
3	Vibration	Frequency range 10 ~ 2000 Hz Amplitude 1.52 mm/20G Sweep time 20 minutes Perpendicular axes each test time 4 Hrs (Total test time 12 Hrs)	MIL-STD-883E
4	Gross Leak	Standard Sample For Automatic Gross Leak Detector, Test Pressure: 2kg / cm2	MIL-STD-883E
5	Fine Leak	Helium Bomging 4.5 kgf / cm 2 for 2 Hrs	
6	Solderability	Temperature 245 ℃ ± 5℃ Immersing depth 0.5 mm minimum Immersion time 5 ± 1 seconds Flux Rosin resin methyl alcohol solvent (1 : 4)	MIL-STD-883E

2.Environmental Endurance

No.	Test Item	Test Methods	REF. DOC
1	Resistance To Soldering Heat	Pre-heat temperature 125 ℃ Pre-heat time 60 ~ 120 sec. Test temperature 260 ± 5 ℃ Test time 10 ± 1 sec.	MIL-STD-202F
2	High Temp. Storage	+ 125 ℃ ± 3 ℃ for 1000 ± 12 Hrs	MIL-STD-883E
3	Low Temp. Storage	- 40 ℃ ± 3 ℃ for 1000 ± 12 Hrs	
4	Thermal Shock	Total 100 cycles of the following temperature cycle 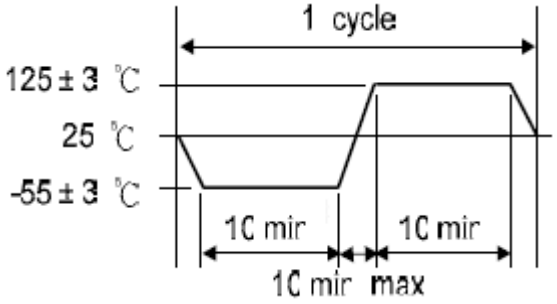	MIL-STD-883E
5	Pressure Cooker Storage	121 ± 3℃ , RH100% , 2 bar , 240 Hrs	JIS C6701
6	High Temp & Humidity	85℃ ± 3℃, RH 85% , 1000 Hrs	JIS C5023
备注			