SPECIFICATION FOR APPROVAL
规　　格　　书

Customer (客户名称)：

Customer P/N(客户编号)：

Our P/N (本厂编号)： FS40DS0450-H12.2-R01

Approval Date(日期)： 2024.08.28

Environment Request(环境标准)：

☐ Non-RoHS (非 RoHS 标准)　　■ RoHS (RoHS 标准)

☐REACH (REACH 标准)　　☐ Others (其他)

CUSTOMER'S APPROVED SIGNATURE		

福声科技 FUSHENG TECHNOLOGY

泰州福声电子科技有限公司

Taizhou Fusheng Electronic Technology Co.,Ltd.

Adds: No.98 of FengHuang Road West,Hailing District ,Taizhou .

地址：江苏省泰州市海陵区凤凰西路98号

Tel: +86-523-86219066　　Fax: +86-523- 81601108

Http://www.tzfsdz.com　　E-mail: fs.wu@electronic-tech.cn

	DESINGER	CHECKED	APPROVED
SIGNATURE			
DATE			

Alteration History

变更历史

Note 序号	Date 日 期	Detail changes 变　更　内　容	Reason 变更理由	Revision 变更表示

Speaker Specification

Part No.	Customer No 客户型号		Customer code 客户编号	
	Our Part No 本厂编号	FS40DS0450-H12.2-R01	Revision 版本	A

No.	Item 项目	Specification 规格	Testing Condition 测试条件
1.	Rated Imp 共称阻抗	4ohm±15%	At 1kHz
2.	Resonance Freq 最低共振周波数	1100Hz±20%	Without Baffle
3.	Output S.P.L. 出力音压	94±3dB	At 0.1m 0.1w 0.8~10.0KHz Average
4.	Rated Power 定格入力	at 5.0W	at 4.48 Vrms
5.	Max Power 最大入力	at 6.0W	at 4.90Vrms
6.	Frequency Range 实效频宽	750Hz~10kHz	Output SPL-10dB
7.	Operation 可靠性试验	Must Be Normal at Rated Frequency Range	Program Source 5.0 W FO~10kHz
8.	Buzzes & Rattles 异常音试验	Should not be audible buzz and rattle at Rated Frequency Range 无异常声	Sine Wave Between (正弦波入力) at 4.48Vrms /50~5.5KHz
9.	T H D 失真	10% Max	Rated Power Input 1000Hz
10.	Magnet 磁铁	Nd Fe B	
11.	Operating Temperature 动作温度	-30℃ to +50℃	
12.	Storage Temperature 储存温度	-40℃ to +65℃	
13.	Waterproof Level 防水等级	IPX7	

14.	Cold Test 耐寒试验	Must be normal after having been in a test chamber for 96 hours at the condition of-40℃±2℃ and then left 2 hours in a room. (-40℃±2℃,96 小时试验室温两小時后,无异常)
15.	Heat Test 耐热试验	Must be normal after having been in a test chamber for 96 hours at the condition of+65℃±2℃ 90~95% R.H and then left 2 hours in a room. (+65℃±2℃ 90~95% R.H96 小时试验，常温 2 小時后,无异常的不良)
16.	Load Test 连续负荷试验	Must be normal after load test :white noise 5.0W 96 hours. At rated frequency range (白噪音 5.0W 连续 96 小时试验后无异常的不良)
17.	Short Term Max Power test 瞬間最大功率试验	Test for 1 hour under maximum power. Input shall be white noise in rated frequency response. And the signal will be 1 second on, 59 seconds off, total 60 cycles at rated frequency range, Must be normal after the test (白噪音 6.0W，1 秒开 59 秒关，连续 60 回合，试验后无异常之不良)
18.	Polarity 极性	When a DC source ′ s "+" polarity is attached to speaker's "+" polarity,"-" polarity is attached speaker's "-" polarity, the membrane will move forward. Red wire is “+”and the black wire is”-“. (接线板右侧为正极,左侧为负极)
19.	Tension Test 拉力测试	A static load of 5.0N shall be applied to the terminals for 10s in any direction between terminal block and frame and between terminal block and fasten terminal. Must be normal after the test (端子板和支架或焊片任一方向上 5.0N 的力 10s 无异常)
20.	Waterproof Test 防水测试	Use 15KPa air pressure test for 5 seconds,and the leakage of less than 6Pa is the waterproof grade IPX7 用15KPa气压测试5 秒，不超过6Pa泄露即为防水等级IPX7

Temperature Cycle Test(5 cycle)

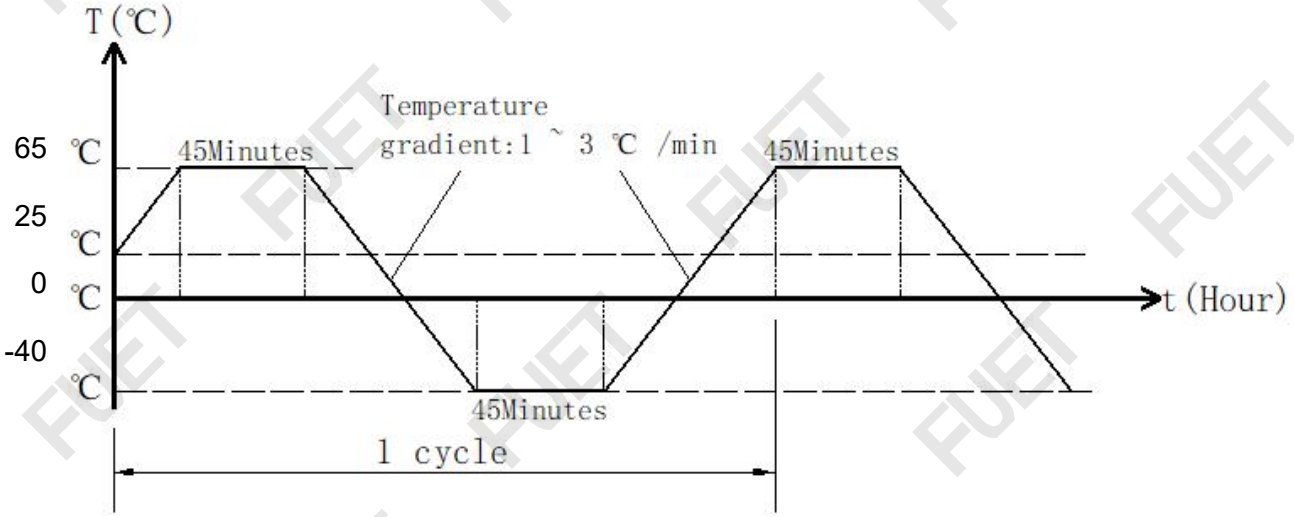

Frequency Response

频响曲线

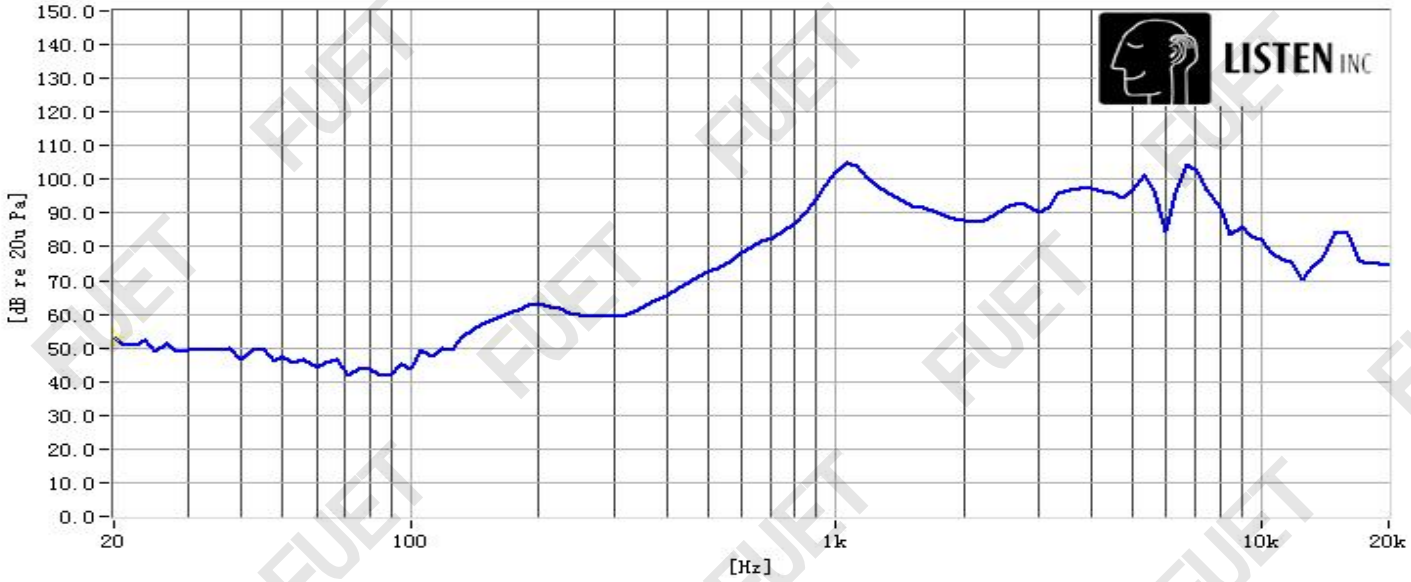

阻抗曲线

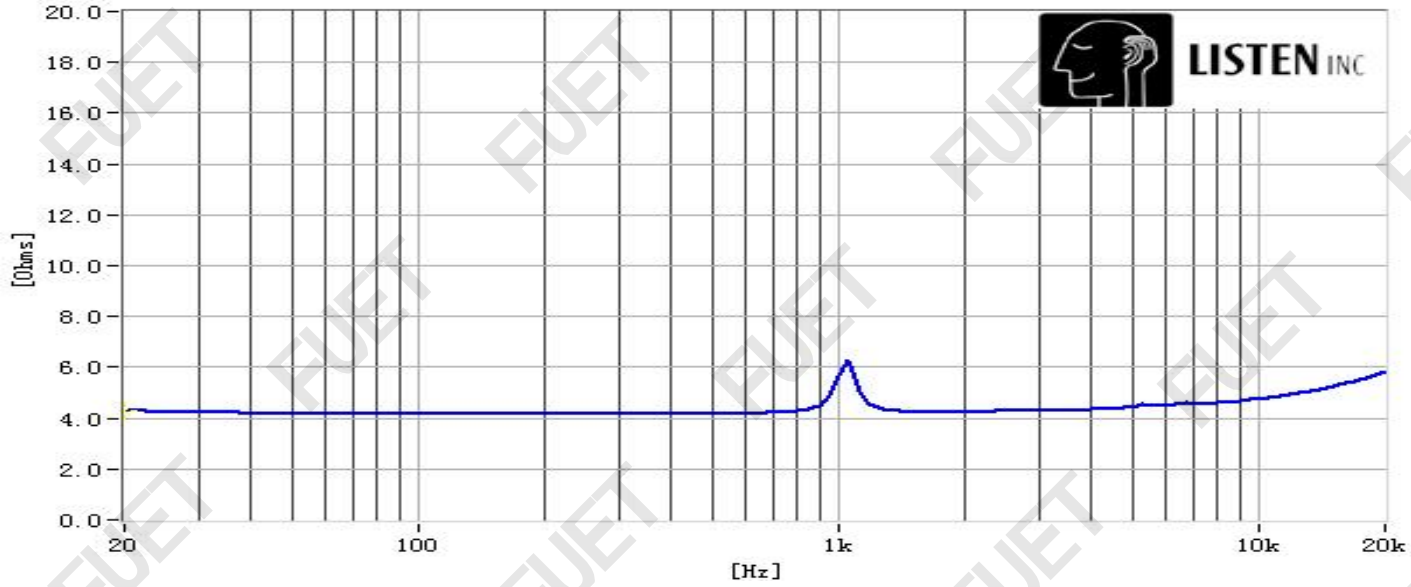

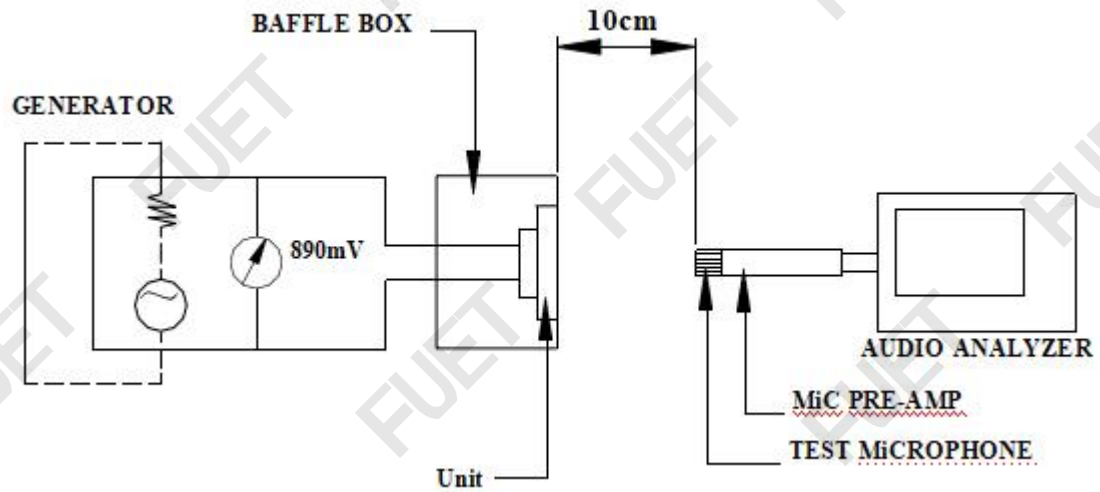

Product Outside View

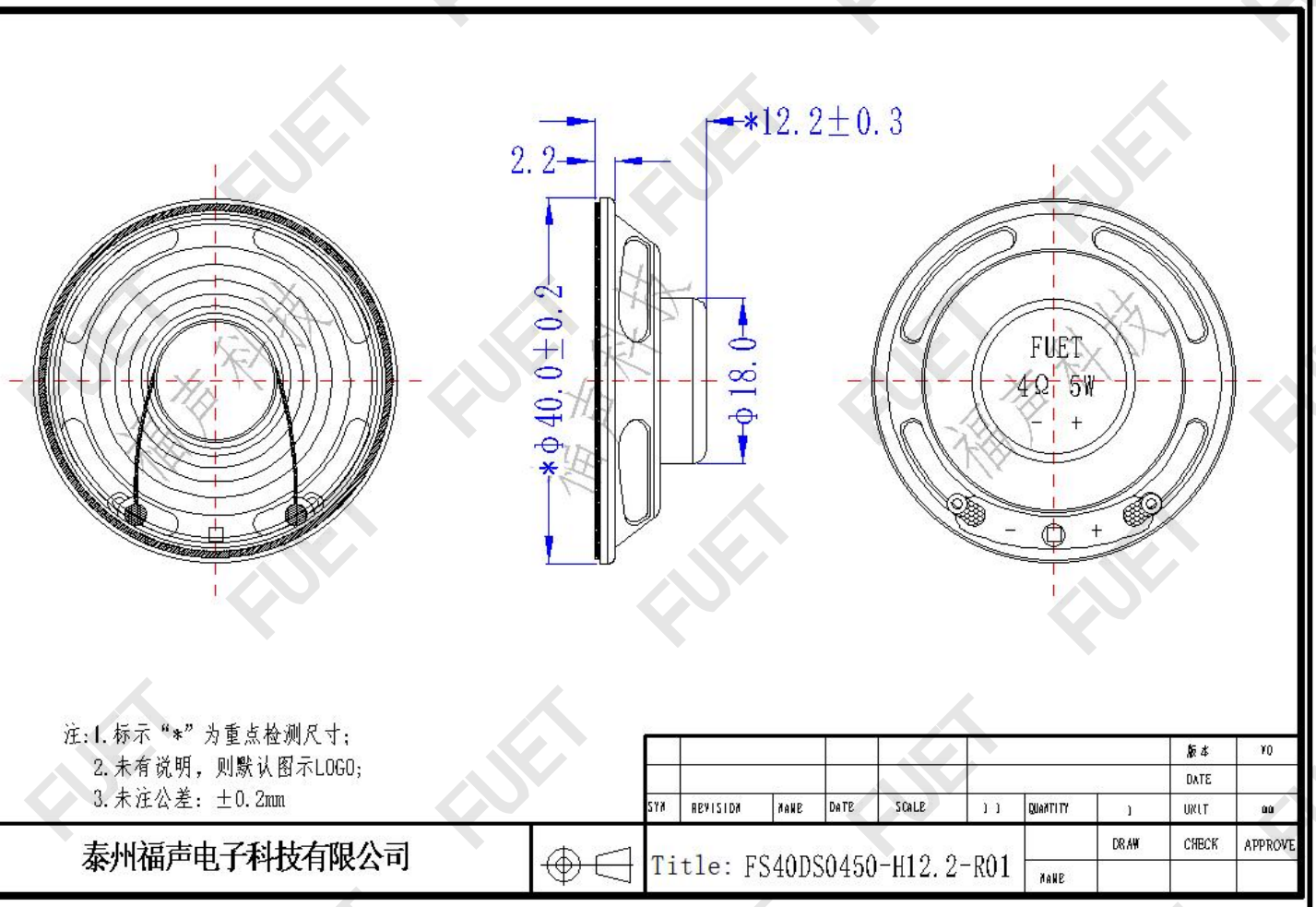

Remark:

PART NO.	PART NAME 名称	MATERIAL 材质
1	Frame 支架	SPCC
2	Plate 华司	SPCC
3	Magnet 磁铁	Nd Fe B
4	Voice Coil 音圈	Kapton+Cu
5	Terminal 接线板	Glass Epoxy
6	Diaphragm 鼓纸	PEN
7	Bullet wave 弹波	CONEX
8	Dust Cap防尘帽	PET
9	Blank pressing压边	ABS
Note: Accord with RoHS2.0 standard		