SPECIFICATION FOR APPROVAL
规　　格　　书

Customer (客户名称)：

Customer P/N(客户编号)：

Our P/N (本厂编号)：　FS40DS0450-H19.3-R01

Approval Date(日期)：　2024.01.20

Environment Request(环境标准)：

☐ Non-RoHS (非 RoHS 标准)　■ RoHS (RoHS 标准)

☐REACH (REACH 标准)　☐ Others (其他)

CUSTOMER'S APPROVED SIGNATURE		

福声科技 FUSHENG TECHNOLOGY

泰州福声电子科技有限公司

Taizhou Fusheng Electronic Technology Co.,Ltd.

Adds: No.98 of FengHuang Road West,Hailing District ,Taizhou .

地址：江苏省泰州市海陵区凤凰西路98号

Tel: +86-523-86219066　Fax: +86-523- 81601108

Http://www.tzfsdz.com　E-mail: sales@electronic-tech.cn

	DESINGER	CHECKED	APPROVED
SIGNATURE			
DATE			

泰州福声电子科技有限公司

Alteration History

变更历史

Note 序号	Date 日 期	Detail changes 变　更　内　容	Reason 变更理由	Revision 变更表示

泰州福声电子科技有限公司

Speaker Specification

Part No.	Customer No 客户型号		Customer code 客户编号	
	Our Part No 本厂编号	FS40DS0450-H19.3-R01	Revision 版本	A

No.	Item 项目	Specification 规格	Testing Condition 测试条件
1.	Rated Imp 共称阻抗	4ohm±15%	At 1kHz
2.	Resonance Freq 最低共振周波数	185Hz±20%	Without Baffle
3.	Output S.P.L. 出力音压	86±3dB	At 0.1m 0.1w 0.6~10.0KHz Average
4.	Rated Power 定格入力	at 5.0W	at 4.48 Vrms
5.	Max Power 最大入力	at 6.0W	at 4.9 Vrms
6.	Frequency Range 实效频宽	80Hz~20kHz	Output SPL-10dB
7.	Operation 可靠性试验	Must Be Normal at Rated Frequency Range	Program Source 5.0 W FO~10kHz
8.	Buzzes & Rattles 异常音试验	Should not be audible buzz and rattle at Rated Frequency Range 无异常声	Sine Wave Between (正弦波入力) at 4.48Vrms / 50----- 10kHz
9.	T H D 失真	10% Max	Rated Power Input 1000Hz
10.	Magnet 磁铁	NdFeB	
11.	Operating Temperature 动作温度	-30℃ to +85℃	
12.	Storage Temperature 储存温度	-30℃ to +85℃	
13.	Waterproof Level 防水等级	IP65	

泰州福声电子科技有限公司

14.	Cold Test 耐寒试验	Must be normal after having been in a test chamber for 96 hours at the condition of-30℃±2℃ and then left 2 hours in a room. (-30℃±2℃,96 小时试验室温两小時后,无异常)
15.	Heat Test 耐热试验	Must be normal after having been in a test chamber for 96 hours at the condition of+85℃±2℃ 90~95% R.H and then left 2 hours in a room. (+85℃±2℃ 90~95% R.H96 小时试验，常温 2 小時后,无异常的不良)
16.	Load Test 连续负荷试验	Must be normal after load test :white noise 5.0W 96 hours. At rated frequency range (白噪音 5.0W 连续 96 小时试验后无异常的不良)
17	Short Term Max Power test 瞬間最大功率试验	Test for 1 hour under maximum power. Input shall be white noise in rated frequency response. And the signal will be 1 second on, 59 seconds off, total 60 cycles at rated frequency range, Must be normal after the test (白噪音 6.0W，1 秒开 59 秒关，连续 60 回合，试验后无异常之不良)
18.	Polarity 极性	When a DC source ´ s "+" polarity is attached to speaker's "+" polarity,"-" polarity is attached speaker's "-" polarity, the membrane will move forward. Red wire is “+”and the black wire is”-“. (接线板右侧为正极,左侧为负极)
19.	Waterproof Test 防水测试	Use 15KPa air pressure test for 5 seconds,and the leakage of less than 10Pa is the waterproof grade IPX5 用15KPa气压测试5 秒，不超过10Pa泄露即为防水等级IPX5
20.	High temperature load test 高温负荷试验	Must be normal after load test :white noise 5.0W 48 hours at the condition of+85℃±2℃ At rated frequency range (白噪音5.0W 连续48小时在+85℃±5，试验后无异常的不良)

Temperature Cycle Test(5 cycle)

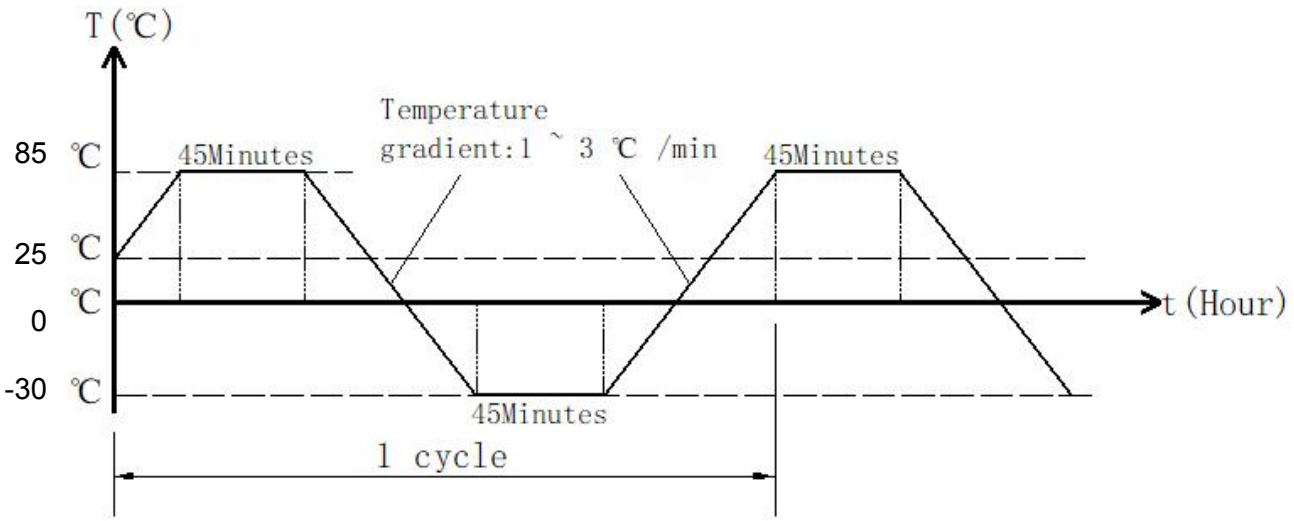

Frequency Response

频响曲线

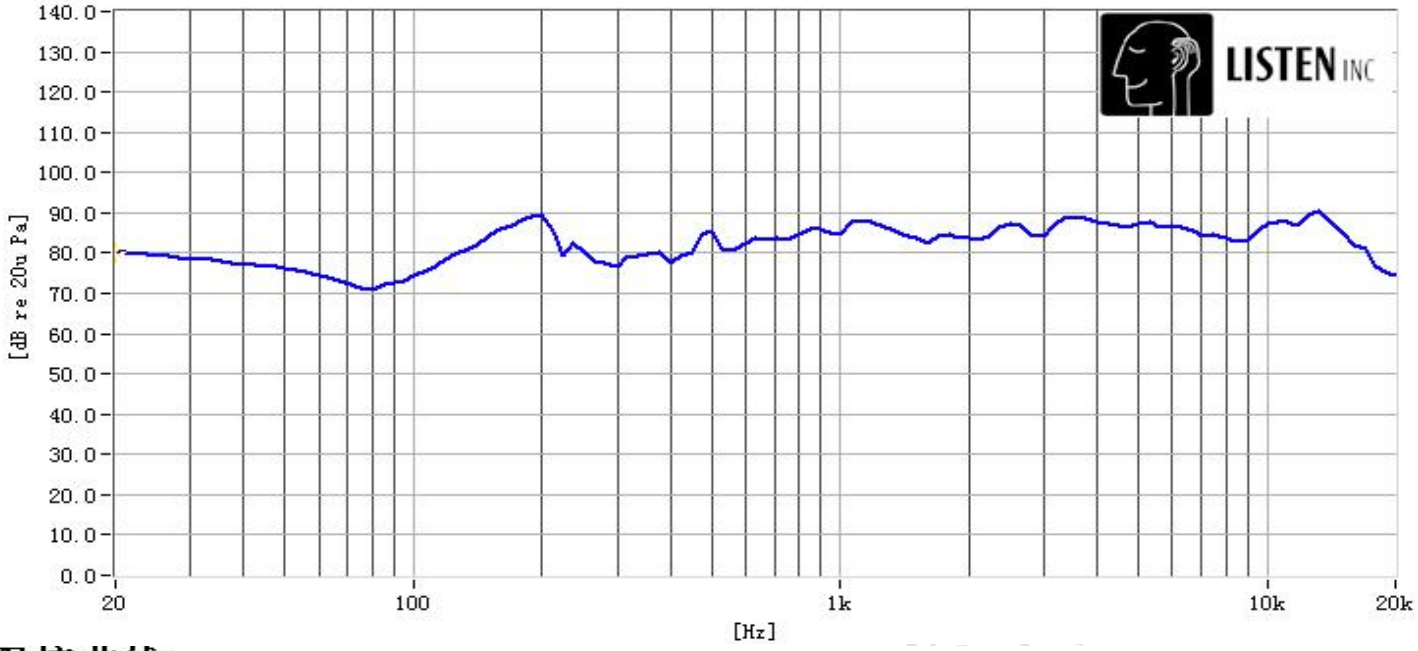

阻抗曲线

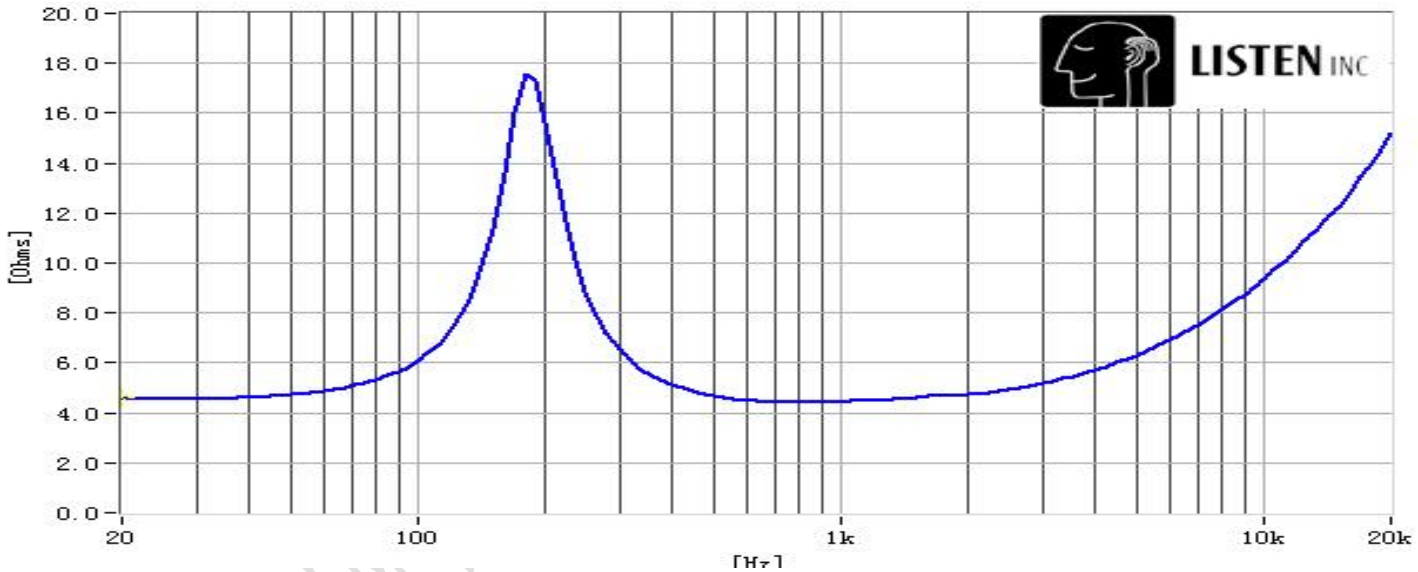

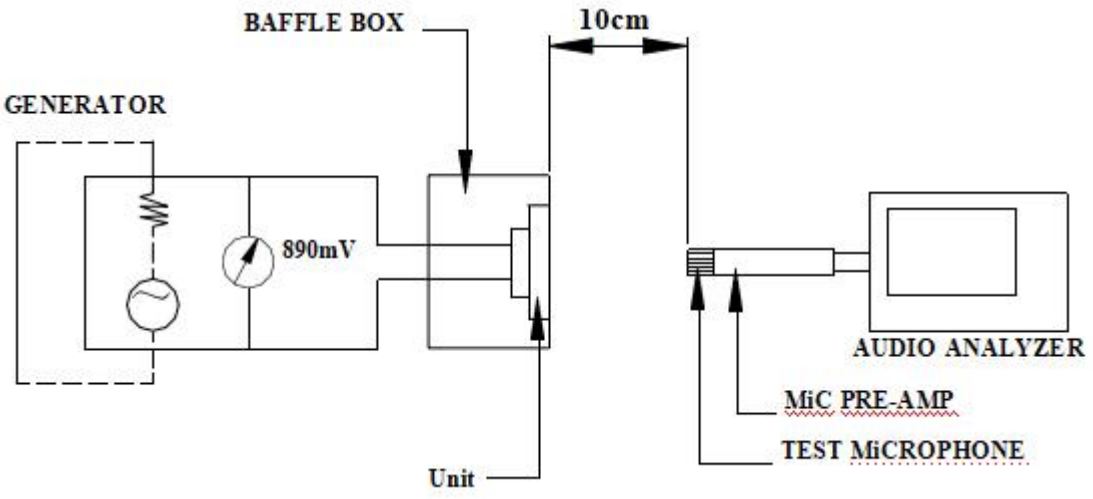

Product Outside View

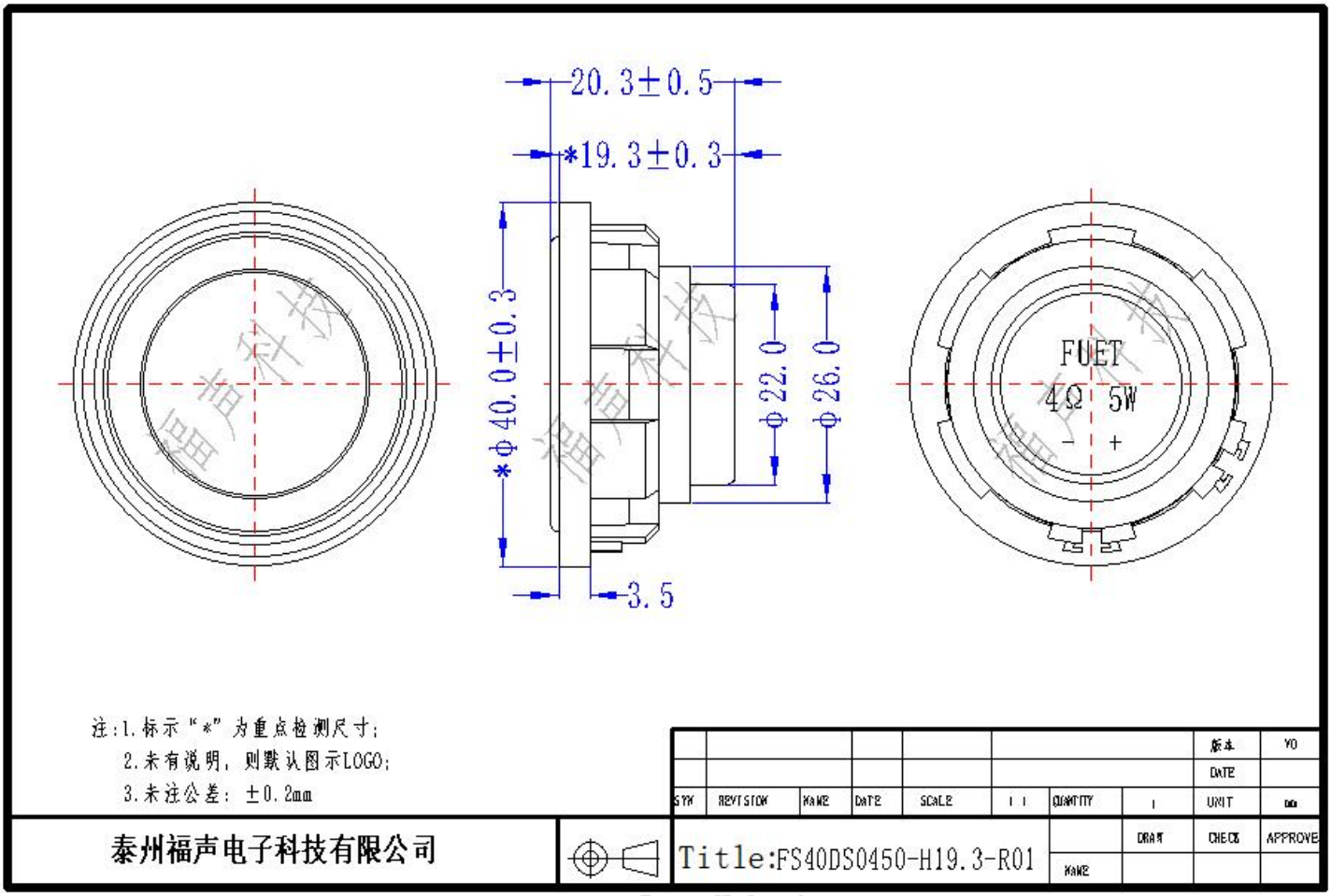

Remark:

PART NO.	PART NAME 名称	MATERIAL 材质
1	Frame 支架	ABS+PC
2	Plate 华司	SPCC
3	Magnet 磁铁	NdFeB N50H*2
4	Voice Coil 音圈	Kapton+Cu
5	Terminal 接线板	Glass Epoxy
6	Diaphragm 鼓纸	Rubber+Paper
7	Bullet wave 弹波	CONEX
8	Dust Cap防尘帽	PEI
Note: Accord with RoHS2.0 standard		