ECN NO.	REV	DATE	DESCRIPTION	APP'D
	A0	2018-1-9		

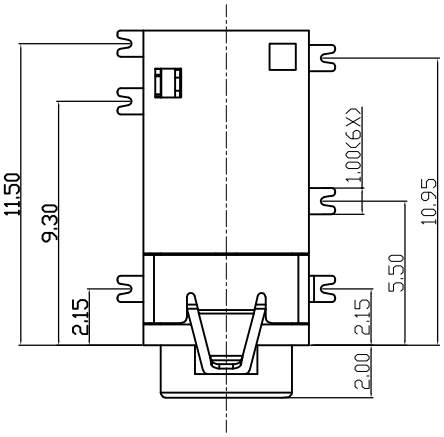

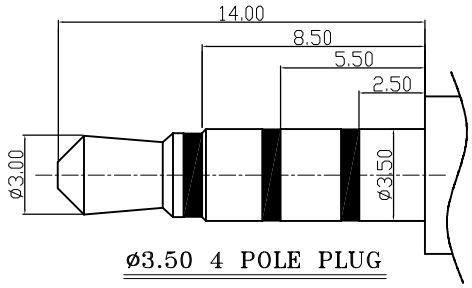

ø3.50 4 POLE PLUG

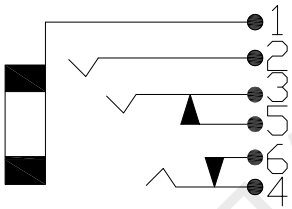

SCHEMATIC

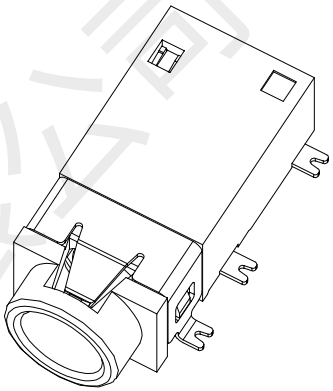

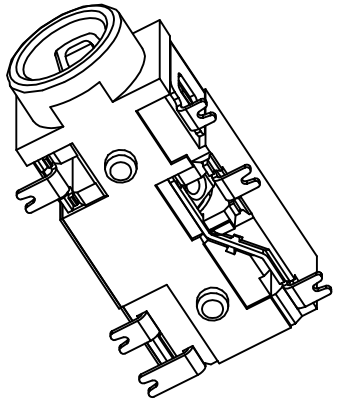

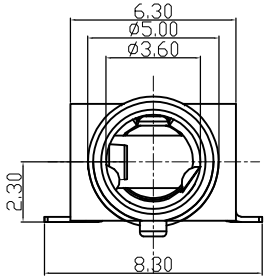

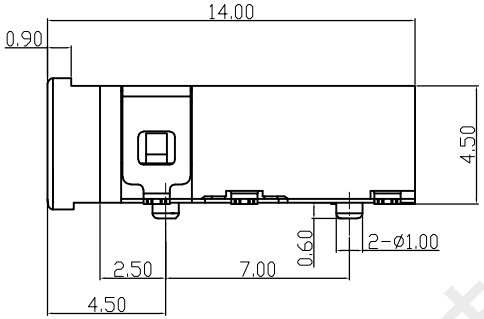

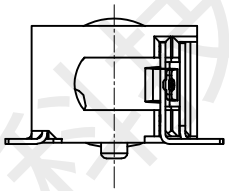

NOTES:
1.MATERIAL:
1.1 HOUSING: UL94V-0,COLOR: BLACK
1.2 CONTACT: SUS ALLOY
2.PLATING:
2.1 CONTACTS PLATING: SEE ORDERING INFORMATION
3.RATING
3.1 OPERATING VOLTAGE: 30VAC/DC.
3.2 CURRENT RATING: 0.5A AC/DC.
3.3 OPERATING TEMPERATURE: **-30° C~70° C。**

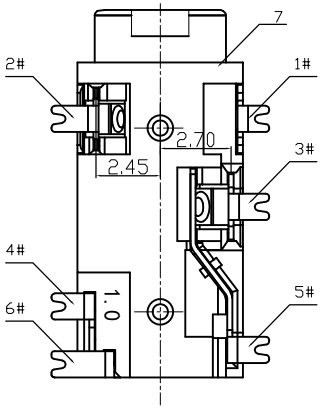

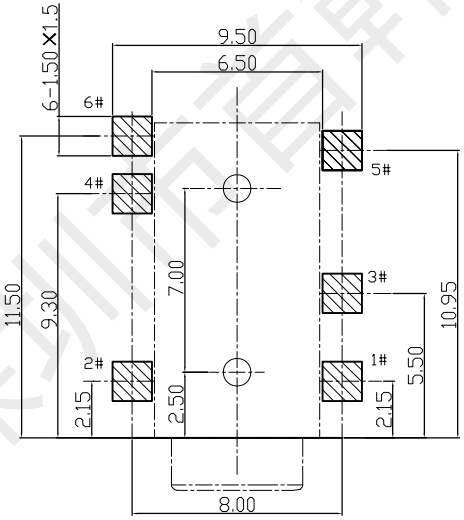

RECOMMEND PCB LAYOUT
TOLERANCE ±0.05

LINEAR	ANGLE
X.±	X.°±
.X± 0.38	.X°±
.XX± 0.25	.XX°±
.XXX±	.XXX°
GENERAL TOLERANCE UNLESS OTHERWISE NOTED	

NAME(INTENDED USE)	PHONE JACK
PART NO.(INTENDED USE)	
APPD:	罗孝金
CHKD:	钟华华
DR:	李春风

深圳市首韩科技有限公司

TITLE:	PJ-342 141
DWG NO.:	C-0067

UNITS	SCALE	SHEET	REV.
mm	N/A	1/1	A0

深圳市首韩科技有限公司

深圳市首韩科技有限公司
SHENZHEN SHOUHAN TECHNOLOGYCO.,LTD
Tel: 0755-27597601 Fax: 0755-27597491

承 认 书

SPECIFICATION FOR APPROVAL

产 品 编 码
material code: _____

产品名称 Project： **耳机座**

规格型号 Part No： **PJ-342 141**

贵公司承认印 Approval signatures

料 号/Part No.	签 章/Signatures

日期 Date:

拟制/Drawn	李春风	深圳市首韩科技有限公司 工程专用章
审核/Check	钟华华	
批准/Approved	罗孝金	

深圳市首韩科技有限公司

深圳市首韩科技有限公司

RIPTION
名称： PHONE JACK
MODEL NO.：PJ-342 141

RATING（额定值）： DC 30V 0.5A

PRACTICAL TEMPERATURE RANGE 使用温度范围	-30~70° C 在-30° C~+70° C 温度内使用
STANDARD ATMOSPHEIC CONDITIONS 测试标准状度	UNLESS OTHERWISE SPECIFIED THE STANDARD RANGE OF ATMOSPHERIC CONDITIONS FOR MAKING MEASUREMENTS AND TESTS ARE AS FOLLOWS: (1) BETWEEN BODY AND CONDUCTOR: 5° C TO 35℃ (2) BETWEEN CONDUCTORS NOT TO BE CONTACT：45% TO 85% (3) PRESSURE：86Kpa TO 106Kpa 在没有指定的情况下测试温度、湿度、气压如下： (1) 温度为 5℃~35℃ (2) 湿度为 45%~85% (3) 气压为 86 Kpa~106Kpa

MECHANICAL（机械性能）

ITEM 项目		TEST CONDITIONS 测试条件	PERFORMANCE 规格
1	CONNECTION FORCE 插入力度	MEASUREMENT SHALL BE MADE AFTER CONNECTING AND DISCONNECTING USING STANDARD PLUG GAUGE 3 TIMES。 依据标准的 PLUG GAUGE 做第 3 次拔插后测定	3~30N
	DISCONNECTION FORCE 拔出力度	MEASUREMENT SHALL BE MADE AFTER CONNECTING AND DISCONNECTING USING STANDARD PLUG GAUGE 3 TIMES。 依据标准的 PLUG GAUGE 做第 3 次拔插后测定	3~30N
2	TERMINAL STRENGTH 端子强度	A STATIC LOAD OF 0.1N/m(1kgf/cm)SHALL BE APPLIED TO THE TIP OF THE TERMINAL FOR 1 MIN IN ANY DIRECTION 向排脚先端的任意一个方向加 1 分钟 0.1N/m(1kgf/cm)的力度.	THERE SHALL BE NO DAMAGE TO THE TERMINAL SUCH AS CRACKS, LOOSENESS OR PLAY ELECTRICAL ,AND MECHANICAL CHARACTERISTICS SHALL BE SATISFIED 在排脚中没有裂开、松动等异常，满足于机械、电气性能

ELECTRICAL（电气性能）

ITEM 项目		TEST CONDITIONS 测试条件	PERFORMANCE 规格
3.1	CONTACT RESISTANCE 接触电阻	MEASURED AT SMALL CURRENT （100m A OR LESS） 1000Hz 在微小电流（100 m A）以下测试	≤50mΩ
3.2	INSULATION RESISTANCE 绝缘电阻	APPLY A VOLTAGE OF 500V DC FOR 1 MIN TO FOLLOWING PORTIONS AFTER WHICH MEASUREMENT SHALL BE MADE: (1) BETWEEN BODY AND CONDUCTOR (2) BETWEEN CONDUCTORS NOT TO BE CONTACT (3) BETWEEN CONDUCTORS NOT TO BE WHEN PLUG IS INSERTED DC 500V 1 MIN 输入 500V DC 电压 1 分钟，按以下接触方法测试： （1） 插座体与排脚之间 （2） 不接触的排脚之间 （3） 插头插入时不接触排脚之间	≥100MΩ

深圳市首韩科技有限公司

3.3	DIELECTRIC STRENGTH 耐电压	AC 500V ims(50~60Hz)FOR 1 MIN TRIP CURRENT:0.5mA (1) BETWEEN BODY AND CONDUCTOR (2) BETWEEN CONDUCTORS NOT TO BE CONTACL (3) BETWEEN CONDUCTORS NOT TO BE WHEN PLUG 输入 AC 500V （50Hz）/min 电压 1 分钟感度电流为 0.5mA, 按以下接触方法测试: (1) 插座体与排脚之间 (2) 不接触的排脚之间 (3) 插头插入时不接触排脚之间	WITHOUT DAMAGE TO PARTS ARCING OR BREAKDOWN ETC 没有绝缘破坏等异常
URABILITY（耐久性）			
ITEM 项目		TEST CONDITIONS 测试条件	PERFORMANCE 规格
4．1	SOLDERA-BILITY TEST 可焊性试验	THE TOP OF THE TERMINALS SHALL BE DIPPED 1mm IN THE SOLDER BATH OF 240±5℃ FOR 3±0.5 SECONDS 端子顶部被浸入锡池中 1mm 深,温度为 240±5℃,时间为 3±0.5 秒	（1）SOLDER WETTING TIME SHALL BE 3 SEC OR LESS 焊接时间应少于 3 秒 （2）THE AREA OF SOLDERING SHOULD BE OVER 75% 焊接面积应有 75%以上
4.2	RESISTANCE TO SOLDERING HEAT TEST 耐焊性试验	REFLOW SOLDERING CONDITIONS: PREHEAT:TEMPERATURE ON THE COPPER FOIL SURFACE SHOULD REACH 180℃.120S AFTER THE P.C.B ENTERED INTO THE SOLDERING EQUIPMENT. TALLEST TEMPERATURE:TEMPERATURE ON THE COPPER FOIL SURFACE SHOULD REACH THE PEAK TEMPERATURE OF 260±5℃WITH IN 20 SECONDS. 过回流焊条件：预热:电镀层表面的温度应达到180℃, 120s 后电路板进入回 流焊设备。 最高温度:电镀层表面温度最 高为 260±5℃且 停留不超过 20秒。 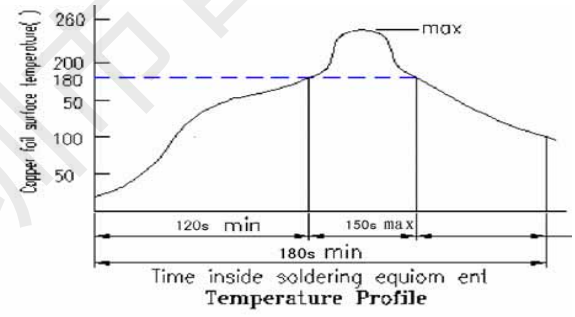 Temperature Profile	WITHOUT DEFOR MATION OF CASE OR EXCESSIVE LOOSENESS OF TEMINALS ELECTRICAL CHARACTERISTICS SHALL BE SATISFIED 本体无变形，满足于机械、电气性能
4. 2	RESISTANCE TO SOLDERING HEAT TEST 耐焊性试验	SOLDERING IRON METHOD: BIT TEMPERATURE 330±5℃ APPLICATION TIME OF SOLDERING IRON3±0.5 SEC HOWEVER EXCESSIVE PRESSURE SHALL NOT BE APPLIED TO THE TERMINAL 手焊接的时候温度需控制在 330±5℃ ，时间为 3±0.5 秒，但不能在排脚上施加异常压力。	WITHOUT DEFORMATION OF CASE OR EXCESSIVE LOOSENESS OF TEMINALS ELECTRICAL CHARACTERISTICS SHALL BE SATISFIED 本体无变形，满足于机械、电气性能

深圳市首韩科技有限公司

4. 3	HUMIDITY TEST 潮湿试验	THE JACK SHALL BE STORED AT A TEMPERATURE OF 40±2℃ AND A HUMIDITY OF 90%TO 96% FOR 96 Hr,THEN THE JACK SHALL BE MAINTAINED AT STANDARD ATMOSPHERIC CONDITION FOR 1 Hr FOR OTHER PROCEDURES 放置 40±2℃ 的相应湿度为 90~96% Hr 环境中 96 小时后，再将样板放在正常环境中 1 小时后进行测试	THERE SHALL BE NO DAMAGE ON APPEARANCE。 MECHANICAL AND ELECTRICAL CHARACTERISTICS SHALL BE SATISFIED 外观无异常，满足于机械、电气性能。
4.4	HEAT TEST 耐热试验	THE JACK SHALL BE STORED AT A TEMPERATURE OF70±2℃ FOR 96 HOURS，AND THEN IT SHALL BE SUBJECTED TO THE CONTROLLED RECOVERY MBASURBM 放置在温度 70±2℃中测试 96 小时后，再放置正常室温中 1 小时来测定	
4．5	COLD TEST 耐寒试验	THE JACK SHALL BE STORED AT A TEMPERATURE OF-25±3℃ FOR 96 HOURS AND THEN IT SHALL BE SUBJECTED TO THE CONTROLLED RECOVERY CONDITIONS FOR 1 HOUR AFTER WHICH 放置在温度-25±3℃中 96 小时后，再放置常温常湿中 1 小时来测定	THERE SHALL BE NO DAMAGE ON APPEARANCE MECHANICAL AND ELECTRICAL CHARACTERISTICS SHALL BE SATISFIED 外观无异常，满足于机械、电气性能
4．6	LIFE TEST 寿命试验	AT RATING CONDITION （NON-INDUCTIVE LOAD） CONNECTION AND DISCONNECTION SHALL BE MADE 5000 CYCLES AT A SPEED 10 TO 20 CYCLES / MIN 以定格状态(无诱导负荷)在 1 分钟内以 10~20 次的速度进行 5000 次插入、拔出	1. CONTACT RESISTANCE SHALL BE ≤ 0.1Ω 2. DISCONNECTION FORCE SHALL BE 3 TO 20N 3. MECHANICAL AND ELECTRICAL CHARACTERISTICS SHALL BE SATISFIED (1) 接触电阻≤0.1Ω (2) 拔出力是 3~20N (3) 其它:满足于机械,、电气性能
4.7	COLD&HEAT SHOCK TEST 冷热冲击测试	THE JACK SHALL BE SUBJECTED TO5 CYCLES OF THE FOLLOWING CONDITIONS SHOWED IN THE FIGURE,AND THEN SHALL RETURNED AND ALLOWED TO REMAIN IN ROOM AMBIENT CONDITION FOR 30 MINUTES 将插座以下列条件作 5 个循环，然后放回室内环境 30 分钟 TEMP (℃) 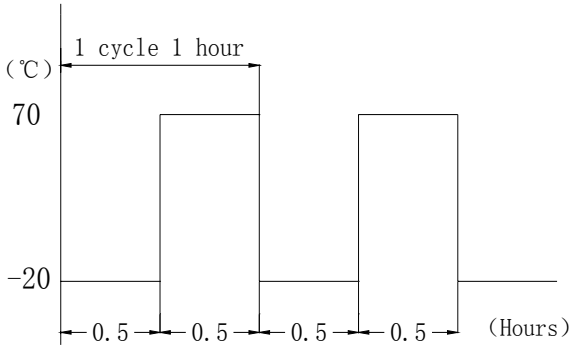 	THERE SHALL BE NO DEFORMATION OR CRACKS IN MOLDED PART. INSERTION & EXTRACTION FORCE:3 TO 20N CONTACT RESISTANCE:MAX.30MΩ INSULATION RESISTANCE: MIN.100 MΩ DIELECTRIC WITHSTANDING VOLTAGE: 500VAC/MIN(BETWEEN TERMINALS) 产品不能变形与破裂 插拔力：3N 至 20N 接触电阻：最大 30mΩ 绝缘电阻：最小 100 MΩ 绝缘耐压：最小 500VAC（端子之间）

深圳市首韩科技有限公司