I_D	$R_{DS(ON)(Typ)}$	V_{DSS}
150A	1.7mΩ	20V

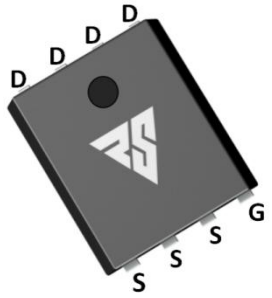

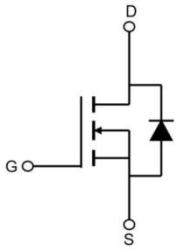

Applications:
- Load Switch
- PWM Application
- Power Management

Features:
- Advanced Trench Technology
- Excellent $R_{DS(ON)}$ and Low Gate Charge

Ordering Information

Part Number	Package	Marking	Packing	Qty.
RS20N150G	PDFN5*6	RS20N150G	Tape&reel	5000 PCS

Absolute Maximun Ratings Tc= 25℃ unless otherwise specified

Symbol	Parameter	RS20N150G	Units
V_{DSS}	Drain-to-Source Voltage	20	V
I_D	Continuous Drain Current T_C=25℃	150	A
I_D	Continuous Drain Current T_C=100℃	93	
I_{DM}	Pulsed Drain Current (*1)	600	
P_D	Power Dissipation	142	W
V_{GS}	Gate- to- Source Voltage	±12	V
E_{AS}	Single Pulse Avalanche Engergy(*2)	210	mJ
T_L T_{PKG}	Maximum Temperature for Soldering Leads at 0.063in(1.6mm)from Case for 10 seconds Package Body for 10 seconds	300 260	℃
T_J and T_{STG}	Operating Junction and Storage Temperature Range	-55 to 150	

* Drain Current Limited by Maximum Junction Temperature

Caution: Stresses greater than those listed in the" Absolute Maximum Ratings" Table may cause permanent damage to the device.

preliminary

Copyright Reasunos

Thermal Resistance

Symbol	Parameter	RS20N150G	Units	Test Conditions
$R_{\theta JC}$	Junction-to-Case	0.88	℃/ W	Drain lead soldered to water cooled heatsink, PD adjusted for a peak junction temperature of + 1 5 0 ℃
$R_{\theta JA}$	Thermal Resistance,Junction to Ambient(*3)	40		

OFF Characteristics TJ= 25℃ unless otherwise specified

Symbol	Parameter	Min.	Typ.	Max.	Units	Test Conditions
BV_{DSS}	Drain- to- source Breakdown Voltage	20	--	--	V	V_{GS}=0V I_D=250μA
I_{DSS}	Drain- to- Source Leakage Current	--	--	1	μA	V_{DS}=20V V_{GS}=0V
I_{GSS}	Gate- to- Source Forward Leakage	--	--	100	nA	V_{GS}=12V V_{DS}=0V
	Gate- to- Source Reverse Leakage	--	--	-100		V_{GS}=-12V V_{DS}=0V

ON Characteristics TJ=25℃ unless otherwise specified

Symbol	Parameter	Min.	Typ.	Max.	Units	Test Conditions
$R_{DS(on)}$	Static Drain- to- Source On-Resistance(*4)	--	1.7	2.3	mΩ	V_{GS}=10V I_D=30A
		--	1.9	2.7		V_{GS}=4.5V I_D=20A
$V_{GS(TH)}$	Gate Threshold Voltage	0.6	0.9	1.3	V	V_{GS}=V_{DS} I_D=250μA

Resistive Switching Characteristics Essentially independent of operating temperature

Symbol	Parameter	Min.	Typ.	Max.	Units	Test Conditions
$t_{d(ON)}$	Turn- on Delay Time	--	20	--	nS	V_{DD}=10V R_G=3Ω V_{GS}=10V I_D=30A
t_{rise}	Rise Time	--	47	--		
$t_{d(OFF)}$	Turn- OFF Delay Time	--	117	--		
t_{fall}	Fall Time	--	120	--		

preliminary

Copyright Reasunos

Dynamic Characteristics Essentially independent of operating temperature

Symbol	Parameter	Min.	Typ.	Max.	Units	Test Conditions
C_{iss}	Input Capacitance	--	6215	--	pF	V_{GS}=0V V_{DS}=10V f=1MHz
C_{oss}	Output Capacitance	--	824	--		
C_{rss}	Reverse Transfer Capacitance	--	723	--		
Q_g	Total Gate Charge	--	64	--	nC	V_{DS}=10V I_D=30A V_{GS}=0 to 4.5V
Q_{gs}	Gate- to- Source Charge	--	12	--		
Q_{gd}	Gate-to-Drain(" Miller") Charge	--	19	--		

Source- Drain Diode Characteristics

Symbol	Parameter	Min.	Typ.	Max.	Units	Test Conditions
I_S	Continuous Source Current	--	--	150	A	Integral pn- diode in MOSFET
I_{SM}	Maximum Pulsed Current	--	--	600	A	
V_{SD}	Diode Forward Voltage	--	--	1.2	V	I_S=30A V_{GS}=0V
t_{rr}	Reverse Recovery Time	--	22	--	nS	I_S=20A di/dt=100A/μs
Q_{rr}	Reverse Recovery Charge	--	12	--	nC	

Notes:

* 1.Repetitive rating, pulse width limited by maximum junction temperature.
* 2.E_{AS} condition: Starting T_J=25C, V_{DD}=10V, V_G=10V, R_G=25ohm, L=0.5mH, I_{AS}=29A
* 3.$R_{\theta JA}$ is measured with the device mounted on a 1inch2 pad of 2oz copper FR4 PCB
* 4.Pulse Test: Pulse width ≤ 300μs, Duty Cycle ≤ 0.5%

Preliminary

Copyright Reasunos

Test ircuits and Waveforms

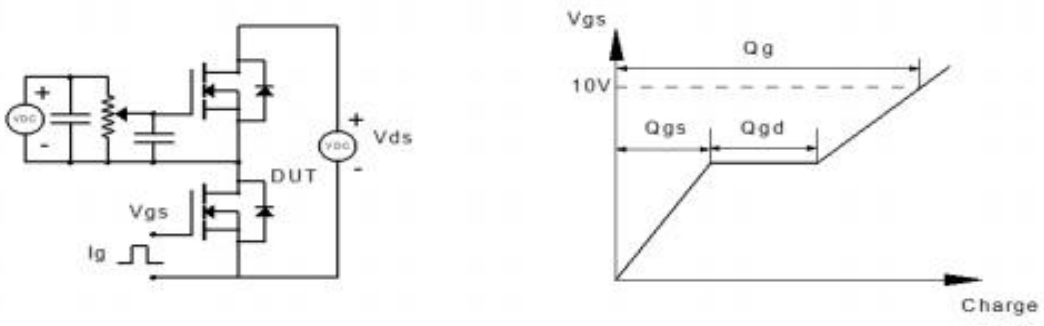

Figure 1: Gate Charge Test Circuit & Waveform

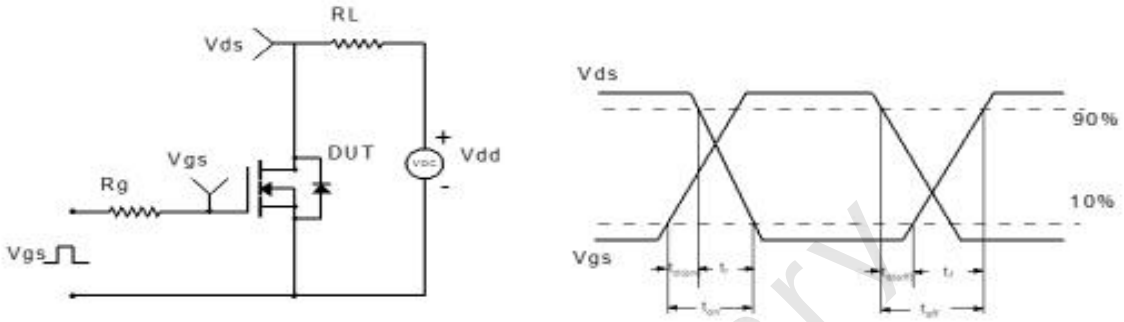

Figure 2: Resistive Switching Test Circuit & Waveform

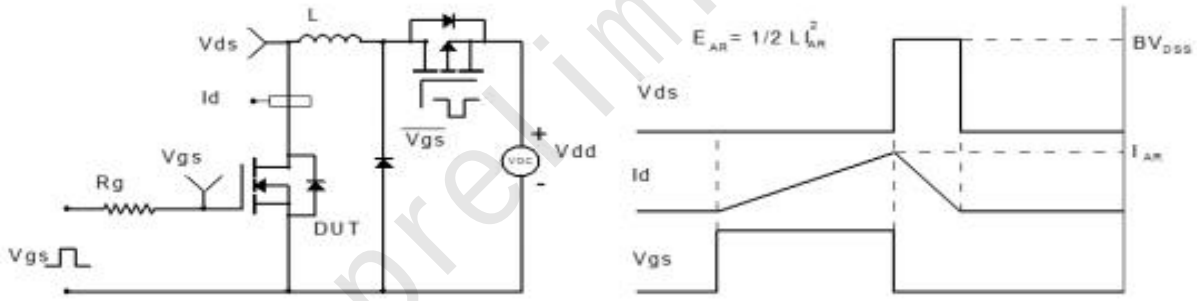

Drain to Sc **Figure 3: Unclamped Inductive Switching Test Circuit& Waveform**

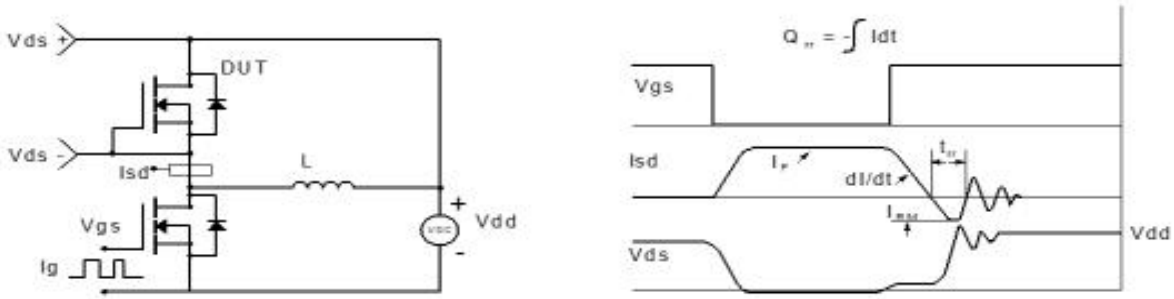

Figure 4: Diode Recovery Test Circuit & Waveform

preliminary

Copyright Reasunos

Package outline drawing(DFN5*6 Unit: mm)

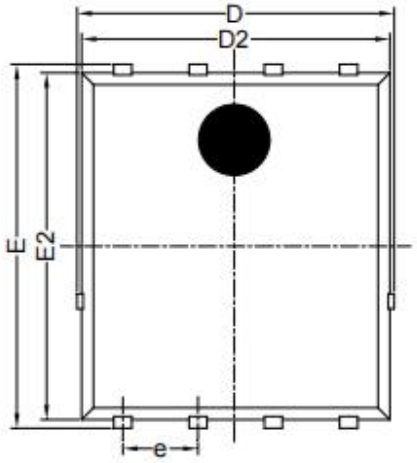

Top View
正面视图

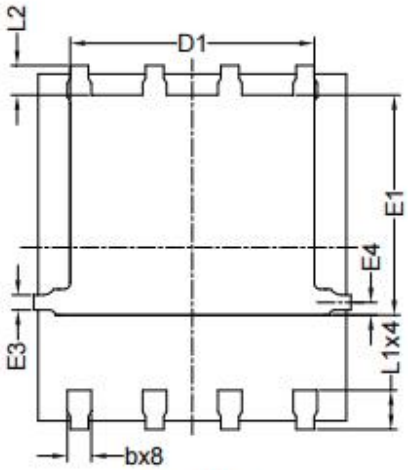

Bottom View
背面视图

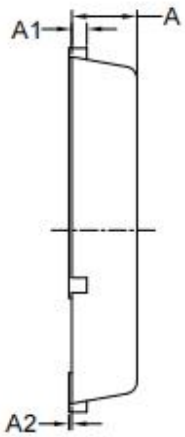

Side View
侧面视图

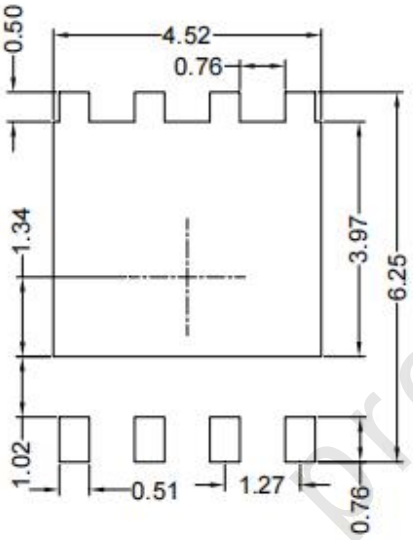

Suggested Solder Pad Layout
Top View

SYMBOL	MILLIMETER		
	MIN	NOM	MAX
D	5.15	5.35	5.55
E	5.95	6.15	6.35
A	1.00	1.10	1.20
A1		0.254 BSC	
A2			0.10
D1	3.92	4.12	4.32
E1	3.52	3.72	3.92
D2	5.00	5.20	5.40
E2	5.66	5.86	6.06
E3		0.254 REF	
E4		0.21 REF	
L1	0.56	0.66	0.76
L2		0.50 BSC	
b	0.31	0.41	0.51
e		1.27 BSC	

Note:
1.Controlling dimension:in millimeters.
2.General tolerance:±0.10mm.
3.The pad layout is for reference purposes only.

preliminary

Copyright Reasunos

Disclaimers:

Reasunos Semiconductor Technology Co.Ltd (Reasunos) reserves the right to make changes without notice in order to improve reliability,function or design and to discontinue any product or service without notice .Customers should obtain the latest relevant information before orders and should verify that such information in current and complete.All products are sold subject to Reasunos's terms and conditions supplied at the time of orderacknowledgement.

Reasunos Semiconductor Technology Co.Ltd warrants performance of its hardware products to the speciffications at the time of sale.Testing,reliability and quality control are used to the extene Reasunos deems necessary to support this warrantee. Except where agreed upon by contr- actual agreement,testing of all parameters of each product is not necessarily performed.

Reasunos Semiconductor Technology Co.Ltd does not assume any liability arising from the use of any product or circuit designs described herein.Customers are responsible for their products and applications using Reasunos's components.To minimize risk,customers must provide adequate design and operating safeguards.

Reasunos Semiconductor Technology Co.Ltd does not warrant or convey any license eith- er expressed or implied under its patent rights,nor the rights of others.Reproduction of inform- ation in Reasunos's data sheeets or data books is permissible only if reproduction is without modification oralteration.Reproduction of this information with any alteration is an unfair and deceptive business practice. Reasunos Semiconductor Technology Co.Ltd is not responsi- ble or liable for such altered documentation.

Resale of Reasunos's products with statements different from or beyond the parameters stated by Reasunos Semiconductor Technology Co.Ltd for that product or service voids all exp- ress or implied warrantees for the associated Reasunos's product or service and is unfair and deceptive business practice. Reasunos Semiconductor Technology Co.Ltd is not responsi- ble or liable for such statements.

preliminary

Life Support Policy:

Reasunos Semiconductor Technology Co.Ltd's Products are not authorized for use as cri- tical components in life support devices or systems without the expressed written approval of Reasunos Semiconductor Technology Co.Ltd.
As used herein:
1. Life support devices or systems are devices or systems which: a.are intended for surgical implant into the human body, b.support or sustain life,c.whose failuer to when properly used in accordance with instructions for used provided in the laeling,can be reasonably expected to result in significant injury to the user.

2.A critical component is any component of a life support device or system whose failure to system whose failure to perform can be reasonably expected to cause the failure of the life support device or system,or to affect its safety or effectiveness.

Copyright Reasunos