Features

- **Single-Supply Operation from +2.5V ~ +5.5V**
- **Rail-to-Rail Output**
- **-3dB Bandwidth(G=+1): 250MHz (Typ)**
- **Low Input Bias Current: 1pA (Typ)**
- **Quiescent Current: 2.8mA/Amplifier (Typ)**
- **Operating Temperature: -40°C ~ +125°C**
- **Small Package:**

GS8051 Available in SOT23-5 and SC70-5 Packages

GS8052 Available in SOP-8,MSOP-8 and DFN-8 Packages

GS8054 Available in SOP-14 and TSSOP-14 Packages

GS8051N Available in SOT23-6 and SC70-6 Packages

GS8052N Available in MSOP-10 Packages

General Description

The GS8051/1N(single), GS8052/2N(dual), GS8054(quad) are rail-to-rail output voltage feedback amplifiers offering ease of use and low cost. They have bandwidth and slew rate typically found in current feedback amplifiers. All have a wide input common-mode voltage range and output voltage swing, making them easy to use on single supplies as low as 2.5V. Despite being low cost, the GS805X series provide excellent overall performance. They offer wide bandwidth to 250MHz (G = +1) along with 0.1dB flatness out to 52MHz (G = +2) and offer a typical low power of 2.8mA/amplifier.

The GS805X series is low distortion and fast settling make it ideal for buffering high speed A/D or D/A converters. The GS8051/2N has a power-down disable feature that reduces the supply current to 50μA. These features make the GS8051/2N ideal for portable and battery-powered applications where size and power are critical. All are specified over the extended -40℃ to +125℃ temperature range.

Applications

- Imaging
- Photodiode Preamp
- DVD/CD
- Filters
- Professional Video and Cameras
- Hand Sets
- Base Stations
- A-to-D Driver

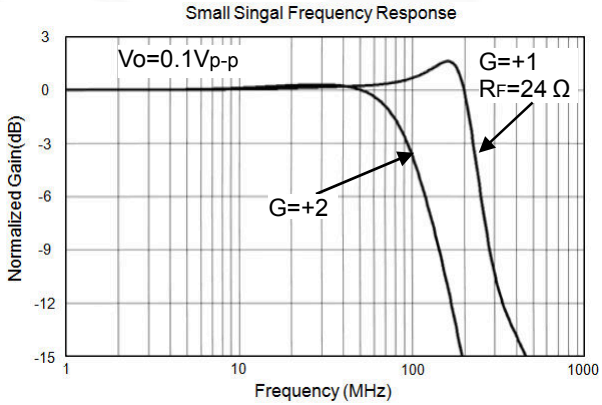

Pin Configuration

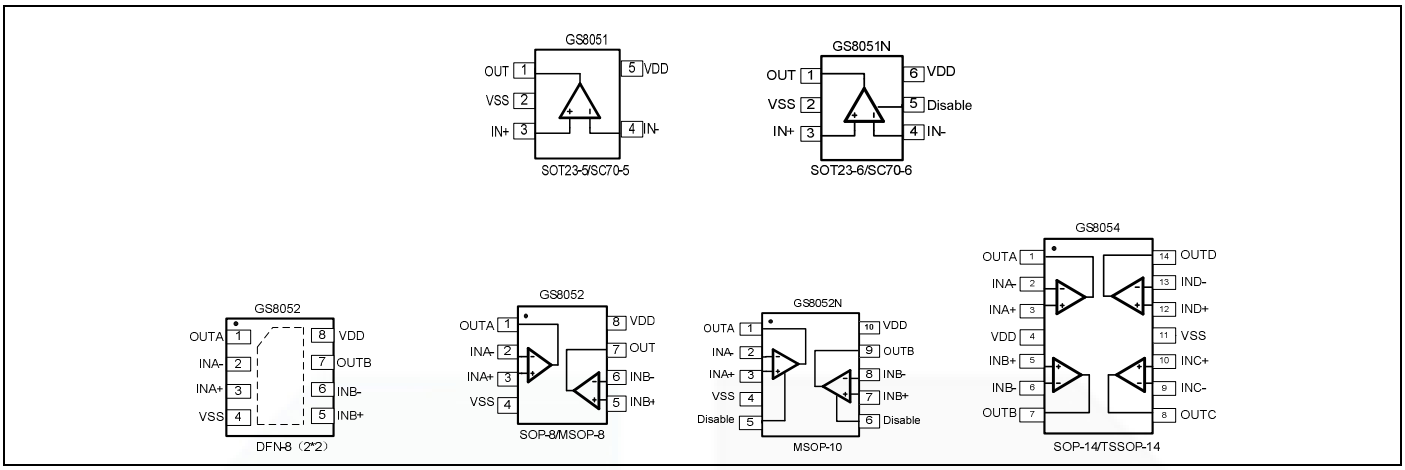

Figure 1. Pin Assignment Diagram

Absolute Maximum Ratings

Condition	Min	Max
Power Supply Voltage (V_{DD} to Vss)	-0.5V	+7.5V
Analog Input Voltage (IN+ or IN-)	Vss-0.5V	V_{DD}+0.5V
PDB Input Voltage	Vss-0.5V	+7V
Operating Temperature Range	-40°C	+125°C
Junction Temperature	+160°C	
Storage Temperature Range	-55°C	+150°C
Lead Temperature (soldering, 10sec)	+260°C	
Package Thermal Resistance (T_A=+25℃)		
SOP-8, θ_{JA}	125°C/W	
MSOP-8, θ_{JA}	216°C/W	
SOT23-5, θ_{JA}	190°C/W	
SOT23-6, θ_{JA}	190°C/W	
SC70-5, θ_{JA}	333°C/W	
SC70-6, θ_{JA}	333°C/W	

Note: Stress greater than those listed under Absolute Maximum Ratings may cause permanent damage to the device. This is a stress rating only and functional operation of the device at these or any other conditions outside those indicated in the operational sections of this specification are not implied. Exposure to absolute maximum rating conditions for extended periods may affect reliability.

Package/Ordering Information

MODEL	CHANNEL	ORDER NUMBER	PACKAGE DESCRIPTION	PACKAGE OPTION	MARKING INFORMATION
GS8051	Single	GS8051-CR	SC70-5	Tape and Reel,3000	8051
		GS8051-TR	SOT23-5	Tape and Reel,3000	8051
GS8052	Dual	GS8052-SR	SOP-8	Tape and Reel,4000	GS8052
		GS8052-MR	MSOP-8	Tape and Reel,3000	GS8052
		GS8052-FR	DFN-8	Tape and Reel,3000	GS8052
GS8054	Quad	GS8054-TR	TSSOP-14	Tape and Reel,3000	GS8054
		GS8054-SR	SOP-14	Tape and Reel,2500	GS8054
GS8051N	Single With shutdown	GS8051N-CR	SC70-6	Tape and Reel,3000	8051N
		GS8051N-TR	SOT23-6	Tape and Reel,3000	8051N
GS8052N	Dual With shutdown	GS8052N-MR	MSOP-10	Tape and Reel,2500	GS8052N

Electrical Performance Characteristics

(G= +2, R_F=887Ω, R_G=887Ω, and R_L=150Ω connected to V_S/2, unless otherwise noted. Typical values are at T_A =+25°C.)

PARAMETER	CONDITIONS	GS8051/52/54/51N/52N						
		TYP	MIN/MAX OVER TEMPERATURE					
		+25℃	+25℃	0℃ to70℃	-40℃to 85℃	-40℃ to125℃	UNITS	MIN/ MAX
DYNAMIC PERFORMANCE								
-3dB Small Signal Bandwidth	G = +1, Vo = 0.1V p-p, R_F = 24 Ω, R_L = 150Ω	180					MHz	TYP
	G = +1, Vo = 0.1V p-p, R_F = 24 Ω, R_L = 1kΩ	250					MHz	TYP
	G = +2, Vo = 0.1V p-p, R_L = 50Ω	55					MHz	TYP
	G = +2, Vo = 0.1V p-p, R_L = 150Ω	93					MHz	TYP
	G = +2, Vo = 0.1V p-p, R_L = 1kΩ	122					MHz	TYP
	G = +2, Vo = 0.1V p-p, R_L = 10kΩ	130					MHz	TYP
Gain-Bandwidth Product	G = +10, R_L = 150Ω	115					MHz	TYP
	G = +10, R_L = 1kΩ	150					MHz	TYP
Bandwidth for 0.1dB Flatness	G = +2, Vo = 0.1V $_{p-p}$, R_L = 150 Ω, R_F =887Ω	52					MHz	TYP
Slew Rate	G = +1, 2V Output Step	77/-151					V/μs	TYP
	G = +2, 2V Output Step	88/-119					V/μs	TYP
	G = +2, 4V Output Step	93/-131					V/μs	TYP
Rise-and-Fall Time	G = +2, Vo = 0.2V_{p-p}, 10% to 90%	4.5					ns	TYP
	G = +2, Vo = 2V_{p-p}, 10% to 90%	18					ns	TYP
Settling Time to 0.1%	G = +2, 2V Output Step	50					ns	TYP
Overload Recovery Time	V_{IN} • G = +VS	18					ns	TYP
NOISE/DISTORTION PERFORMANCE								
Input Voltage Noise	f = 1MHz	4.9					nV/ Hz	TYP
Differential Gain Error (NTSC)	G = +2, R_L = 150Ω	0.03					%	TYP
Differential Phase Error (NTSC)	G = +2, R_L = 150Ω	0.08					degree	TYP
DC PERFORMANCE								
Input Offset Voltage (V_{OS})		±2	±8	±8.9	±9.5	±9.8	mV	MAX
Input Offset Voltage Drift		2					μV/℃	TYP
Input Bias Current (I_B)		1					PA	TYP
Input offset Current (I_{OS})		2					PA	TYP
Open-Loop Gain (A_{OL})	V_O = 0.3V to 4.7V, R_L = 150Ω	80	75	74	74	73	dB	MIN
	V_O = 0.2V to 4.8V, R_L = 1kΩ	104	92	91	91	80	dB	MIN
INPUT CHARACTERISTICS								
Input Common-Mode Voltage Range (V_{CM})		-0.2 to +3.8					V	TYP
Common-Mode Rejection Ratio (CMRR)	V_{CM} = -0.1V to +3.5V	80	66	65	65	62	dB	MIN

Electrical Performance Characteristics

(G= +2, R_F=887Ω, R_G=887Ω, and R_L=150Ω connected to V_S/2, unless otherwise noted. Typical values are at T_A =+25°C.)

PARAMETER	CONDITIONS	GS8051/52/54/51N/52N						
		TYP	MIN/MAX OVER TEMPERATURE					
		+25℃	+25℃	0℃ to70℃	-40℃to 85℃	-40℃ to125℃	UNITS	MIN/ MAX
OUTPUT CHARACTERISTICS								
Output Voltage Swing from Rail	R_L = 150Ω	0.12					V	TYP
	R_L = 1kΩ	0.03					V	TYP
Output Current		80	60				mA	MIN
Closed-Loop Output Impedance	f＜100kHz	0.08					Ω	TYP
POWER-DOWN DISABLE (GS8051/2N only)								
Turn-On Time		236					ns	TYP
Turn-Off Time		52					ns	TYP
DISABLE Voltage-Off			0.8				V	MAX
DISABLE Voltage-On			2				V	MIN
POWER SUPPLY								
Operating Voltage Range			2.5	2.7	2.7	2.7	V	MIN
			5.5	5.5	5.5	5.5	V	MAX
Quiescent Current (per amplifier)		2.8	3.65				mA	MAX
Supply Current when Disabled per amplifier(GS8051/2N only)		50	70	85	100	137	μA	MAX
Power Supply Rejection Ratio (PSRR)	ΔV_S = +2.7V to +5.5V, V_{CM} = (-V_S) +0.5	80	67	67	65	62	dB	MIN

Typical Performance characteristics

(Vs=+5V,G= +2, R_F=887Ω,RG=887Ω,and R_L=150Ωconnected to Vs/2, unless otherwise noted. Typical values are at T_A =+25°C.)

Non-Inverting Large-Signal Step Response

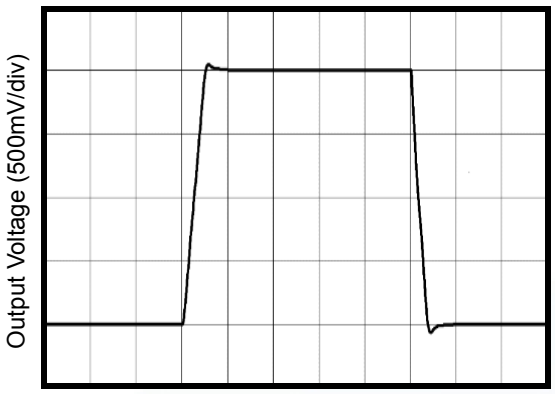

Non-Inverting Small-Signal Step Response

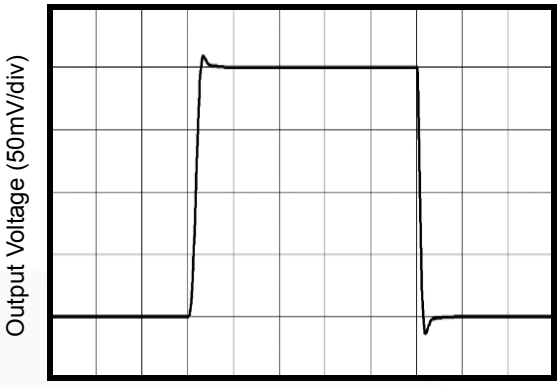

Supply Current vs. Temperature

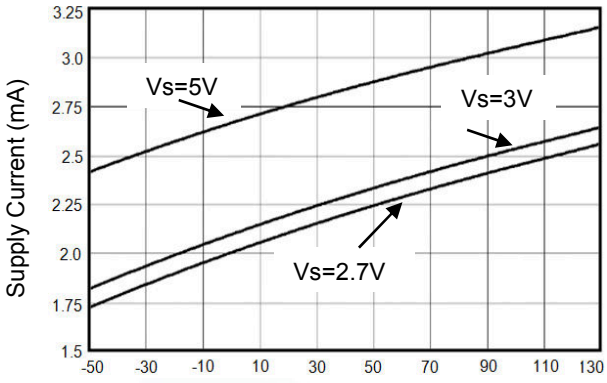

Sutdown Current vs. Temperature

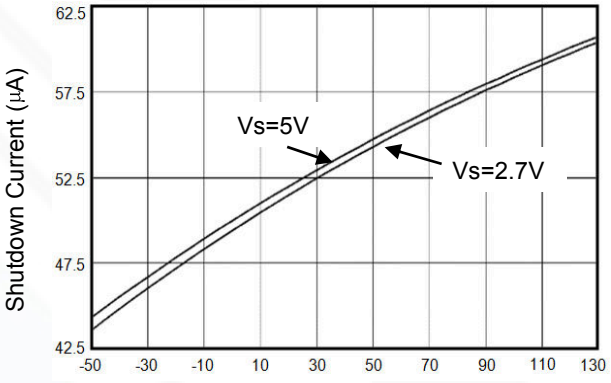

Output Voltage Swing vs. Output Current

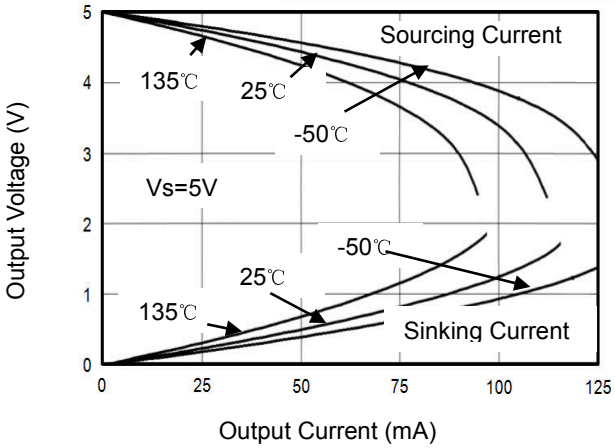

Output Voltage vs. Output Current

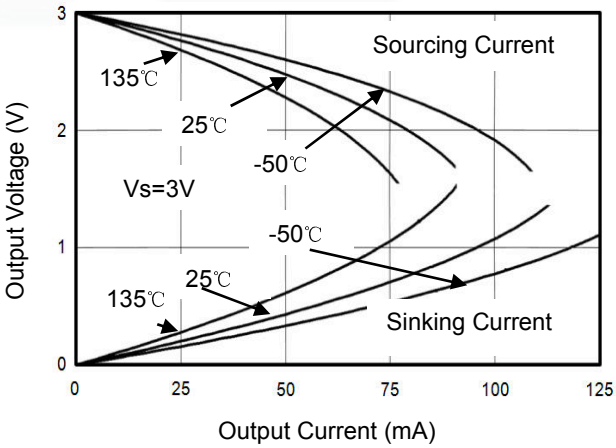

Typical Performance characteristics

((Vs=+5V,G= +2, R_F=887Ω,R_G=887Ω,and R_L=150Ωconnected to Vs/2, unless otherwise noted. Typical values are at T_A =+25°C.)

Non-Inverting Small Signal Frequency Response

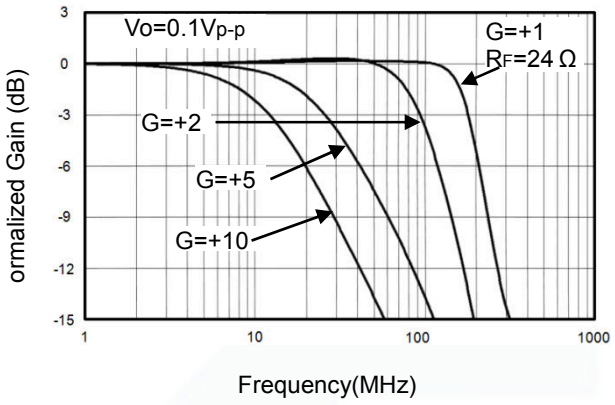

Inverting Small Signal Frequency Response

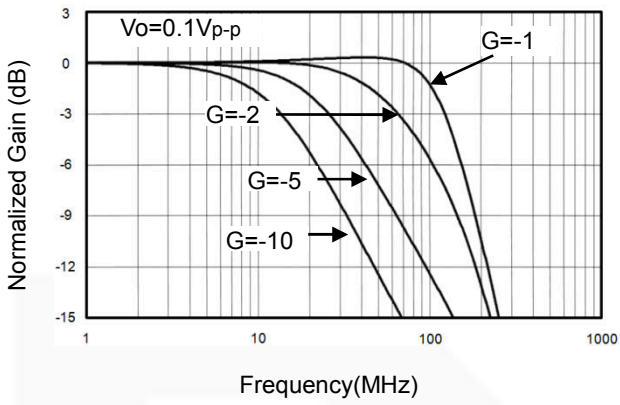

Frequency Response For Various R_L

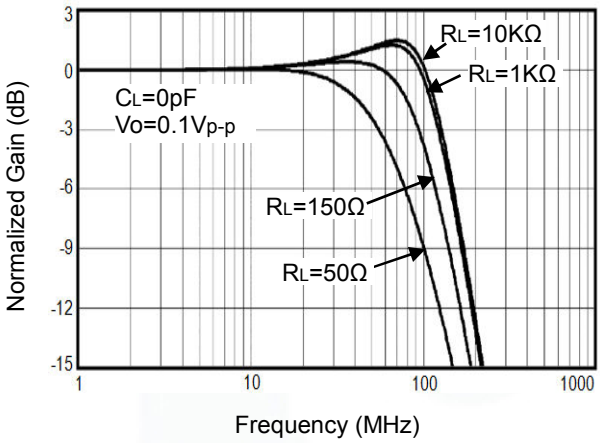

0.1dB Gain Flatness For Various R_F

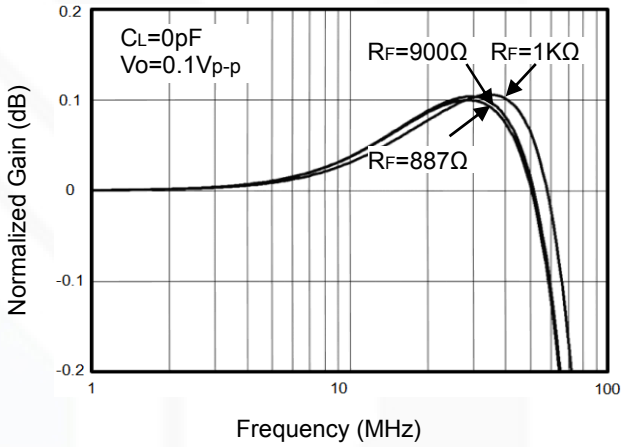

Frequency Response For Various C_L

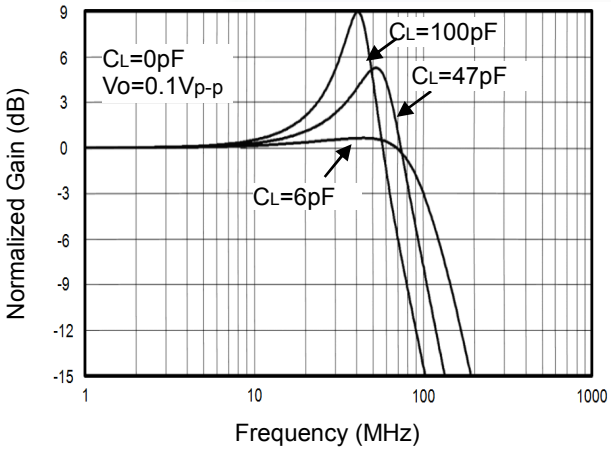

Frequency Response vs.Capacitive Load

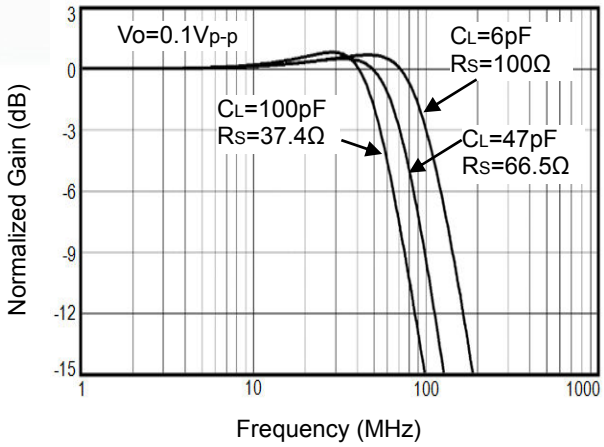

Typical Performance characteristics

(Vs=+5V,G= +2, R_F=887Ω,RG=887Ω,and R_L=150Ωconnected to Vs/2, unless otherwise noted. Typical values are at T_A =+25°C.)

Input Voltage Noise Spectral Density vs. Frequency

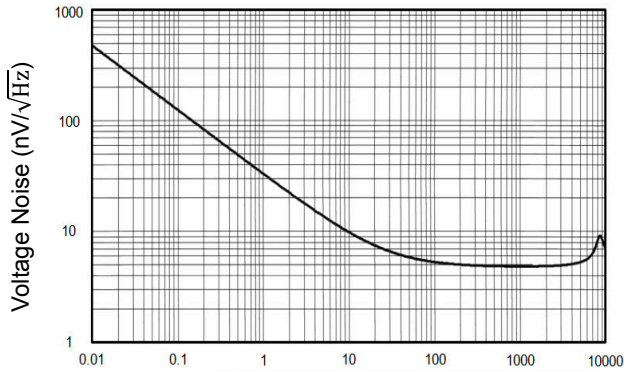

Overload Recovery Time



Large-Signal Disable/Enable Response

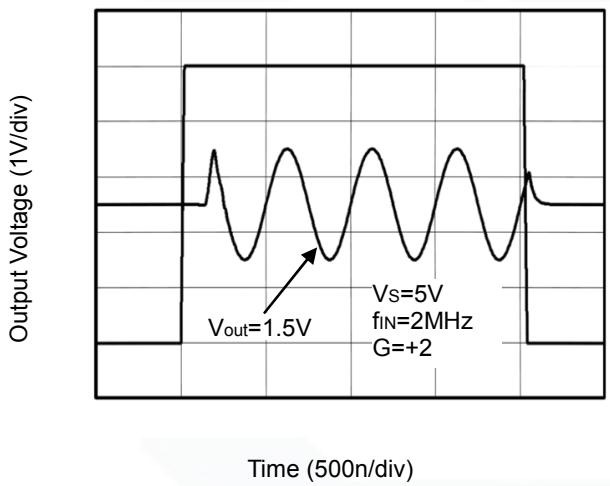

Closed-Loop Output Impedance vs Frequency

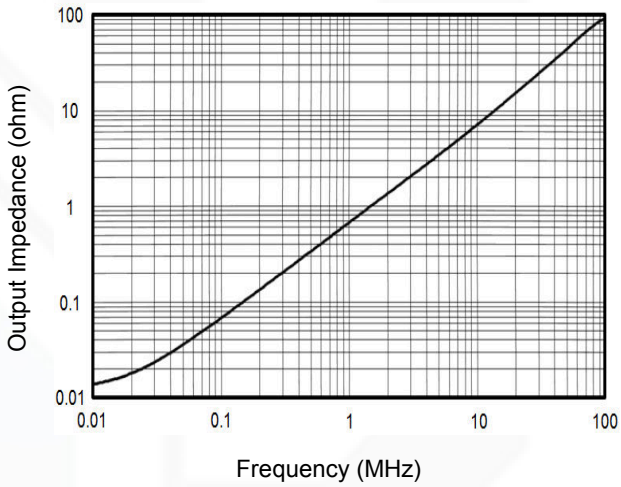

Application Note

Driving Capacitive Loads

GS805X series op amps are unity-gain stable and suitable for a wide range of general-purpose applications. The small footprints of the GS805X series packages save space on printed circuit boards and enable the design of smaller electronic products.

Power Supply Bypassing and Board Layout

GS805X series operates from a single 2.5V to 5.5V supply or dual ±1.25V to ±2.75V supplies. For best performance, a 0.1μF ceramic capacitor should be placed close to the V_{DD} pin in single supply operation. For dual supply operation, both V_{DD} and V_{SS} supplies should be bypassed to ground with separate 0.1μF ceramic capacitors.

Low Supply Current

The low supply current (typical 2.8mA per channel) of GS805X series will help to maximize battery life. They are ideal for battery powered systems.

Operating Voltage

GS805X series operate under wide input supply voltage (2.5V to 5.5V). In addition, all temperature specifications apply from -40°C to +125°C. Most behavior remains unchanged throughout the full operating voltage range. These guarantees ensure operation throughout the single Li-Ion battery lifetime.

Rail-to-Rail Output

Rail-to-Rail output swing provides maximum possible dynamic range at the output. This is particularly important when operating in low supply voltages. The output voltage of GS805X series can typically swing to less than 8mV from supply rail in light resistive loads (>1kΩ), and 30mV of supply rail in moderate resistive loads (150Ω).

Capacitive Load Tolerance

The GS805X family is optimized for bandwidth and speed, not for driving capacitive loads. Output capacitance will create a pole in the amplifier's feedback path, leading to excessive peaking and potential oscillation. If dealing with load capacitance is a requirement of the application, the two strategies to consider are (1) using a small resistor in series with the amplifier's output and the load capacitance and (2) reducing the bandwidth of the amplifier's feedback loop by increasing the overall noise gain. Figure 2. shows a unity gain follower using the series resistor strategy. The resistor isolates the output from the capacitance and, more importantly, creates a zero in the feedback path that compensates for the pole created by the output capacitance.

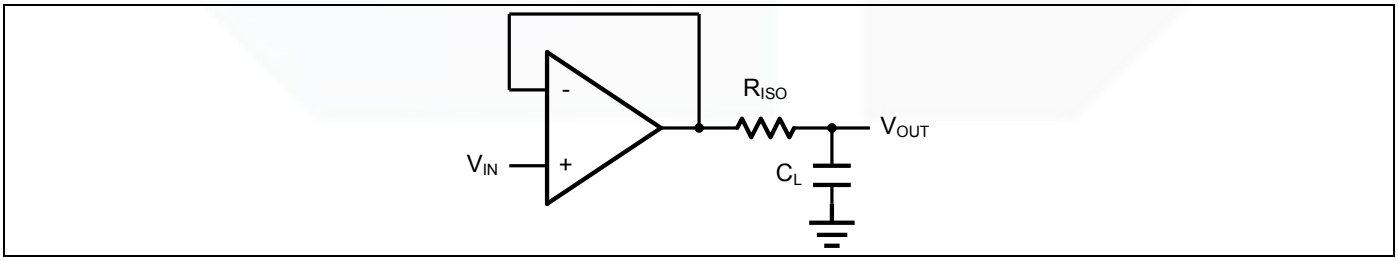

Figure 2. Indirectly Driving a Capacitive Load Using Isolation Resistor

The bigger the RISO resistor value, the more stable VOUT will be. However, if there is a resistive load RL in parallel with the capacitive load, a voltage divider (proportional to R_{ISO}/R_L) is formed, this will result in a gain error.

The circuit in Figure 3 is an improvement to the one in Figure 2. R_F provides the DC accuracy by feed-forward the V_{IN} to R_L. C_F and R_{ISO} serve to counteract the loss of phase margin by feeding the high frequency component of the output signal back to the amplifier's inverting input, thereby preserving the phase margin in the overall feedback loop. Capacitive drive can be increased by increasing the value of C_F. This in turn will slow down the pulse response.

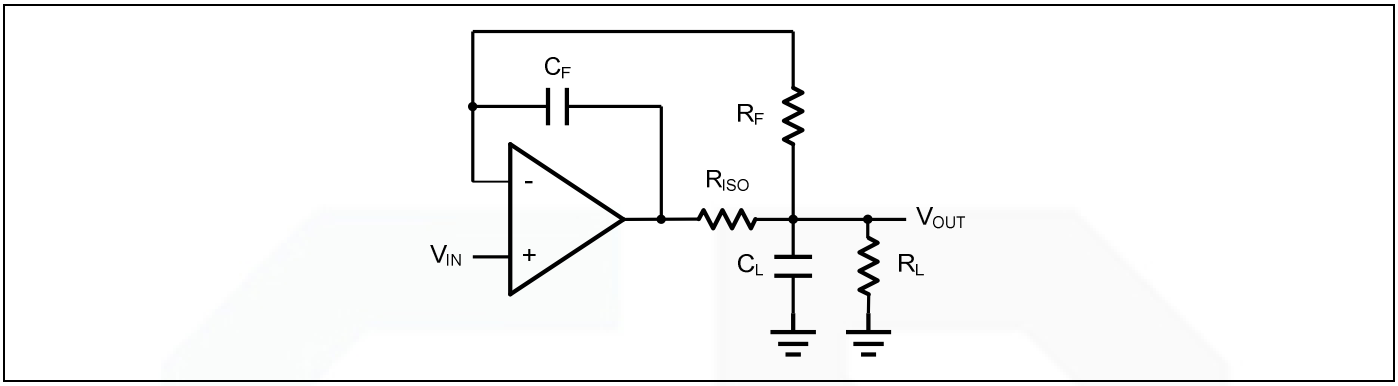

Figure 3. Indirectly Driving a Capacitive Load with DC Accuracy

Typical Application Circuits

Differential amplifier

The differential amplifier allows the subtraction of two input voltages or cancellation of a signal common the two inputs. It is useful as a computational amplifier in making a differential to single-end conversion or in rejecting a common mode signal. Figure 4. shown the differential amplifier using GS805X.

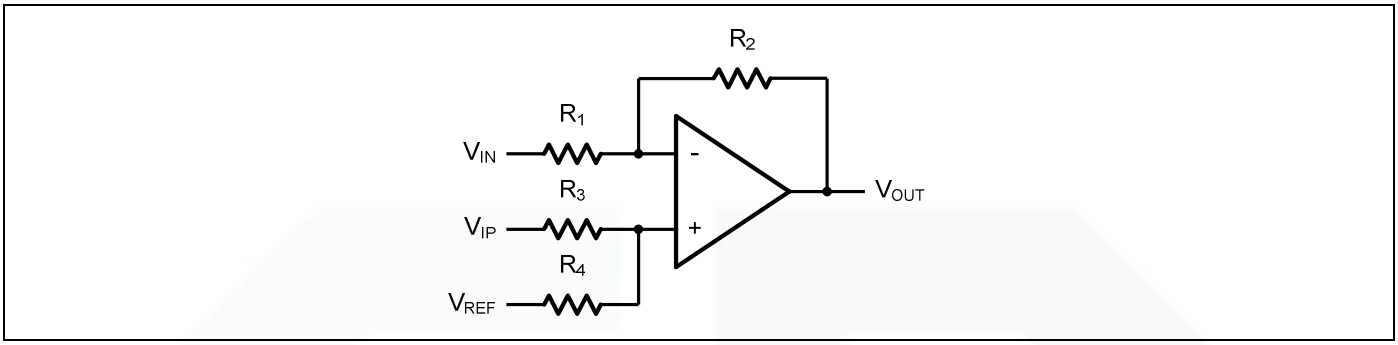

Figure 4. Differential Amplifier

$$V_{OUT}=(\frac{R1+R2}{R3+R4})\frac{R4}{R1}V_{IN}-\frac{R2}{R1}V_{IP}+(\frac{R1+R2}{R3+R4})\frac{R3}{R1}V_{REF}$$

If the resistor ratios are equal (i.e. R_1=R_3 and R_2=R_4), then

$$V_{OUT}=\frac{R_2}{R_1}(V_{IP}-V_{IN})+V_{REF}$$

Low Pass Active Filter

The low pass active filter is shown in Figure 5. The DC gain is defined by $-R_2/R_1$. The filter has a -20dB/decade roll-off after its corner frequency $f_C=1/(2\pi R_3C_1)$.

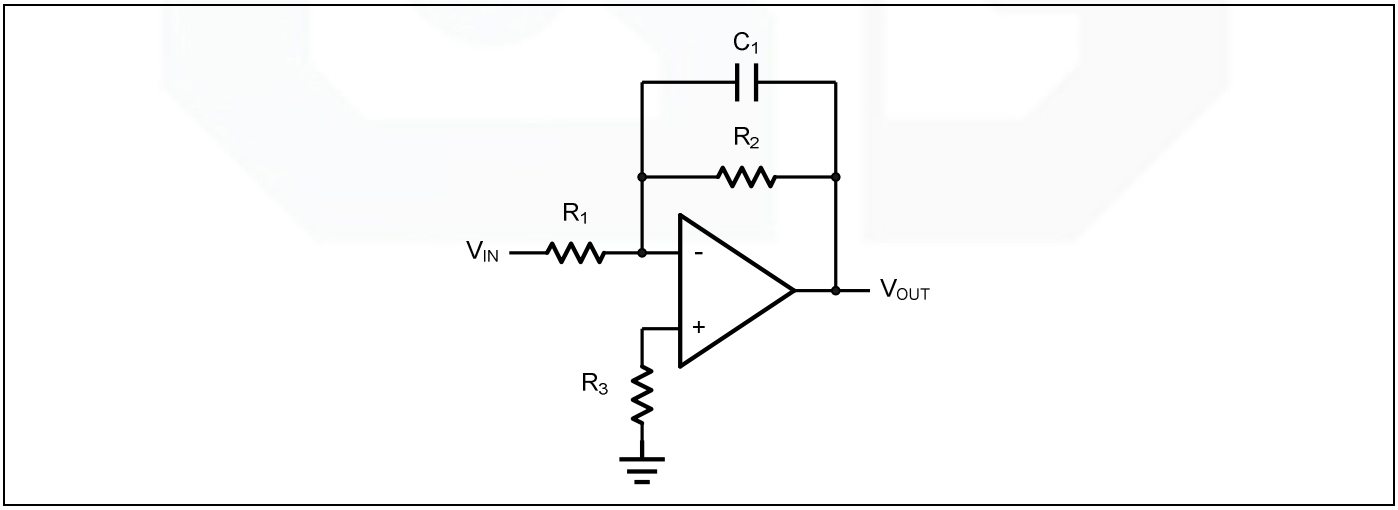

Figure 5. Low Pass Active Filter

Driving Video

The GS805X can be used in video applications like in Figure 6.

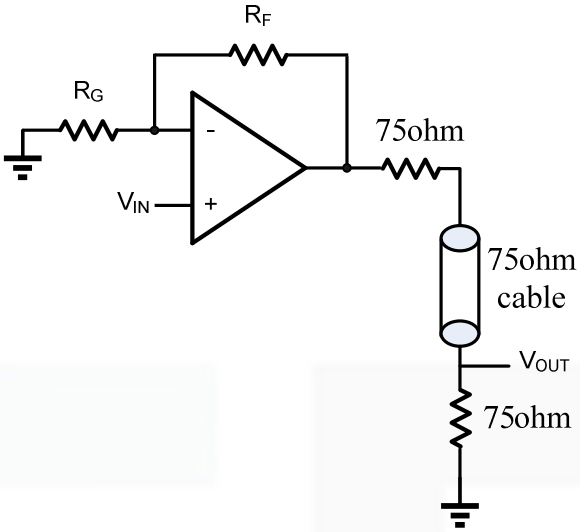

Figure 6. Typical video driving

Package Information

MSOP-8

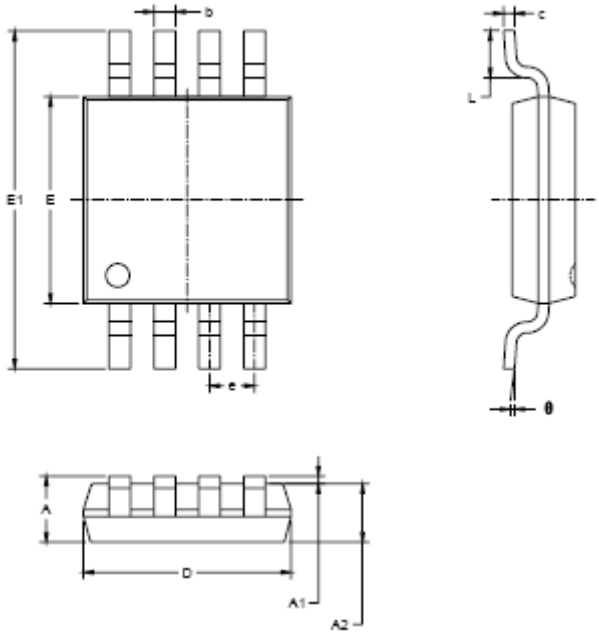

Symbol	Dimensions In Millimeters		Dimensions In Inches	
	MIN	MAX	MIN	MAX
A	0.820	1.100	0.032	0.043
A1	0.020	0.150	0.001	0.006
A2	0.750	0.950	0.030	0.037
b	0.250	0.380	0.010	0.015
c	0.090	0.230	0.004	0.009
D	2.900	3.100	0.114	0.122
E	2.900	3.100	0.114	0.122
E1	4.750	5.050	0.187	0.199
e	0.650 BSC		0.026 BSC	
L	0.400	0.800	0.016	0.031
θ	0°	6°	0°	6°

SOP-8

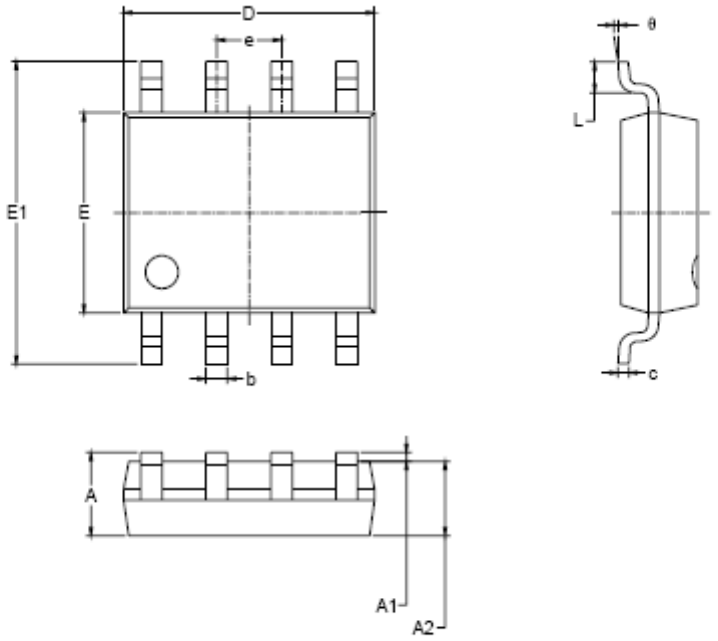

Symbol	Dimensions In Millimeters		Dimensions In Inches	
	MIN	MAX	MIN	MAX
A	1.350	1.750	0.053	0.069
A1	0.100	0.250	0.004	0.010
A2	1.350	1.550	0.053	0.061
b	0.330	0.510	0.013	0.020
c	0.170	0.250	0.006	0.010
D	4.700	5.100	0.185	0.200
E	3.800	4.000	0.150	0.157
E1	5.800	6.200	0.228	0.244
e	1.27 BSC		0.050 BSC	
L	0.400	1.270	0.016	0.050
θ	0°	8°	0°	8°

SOT23-5

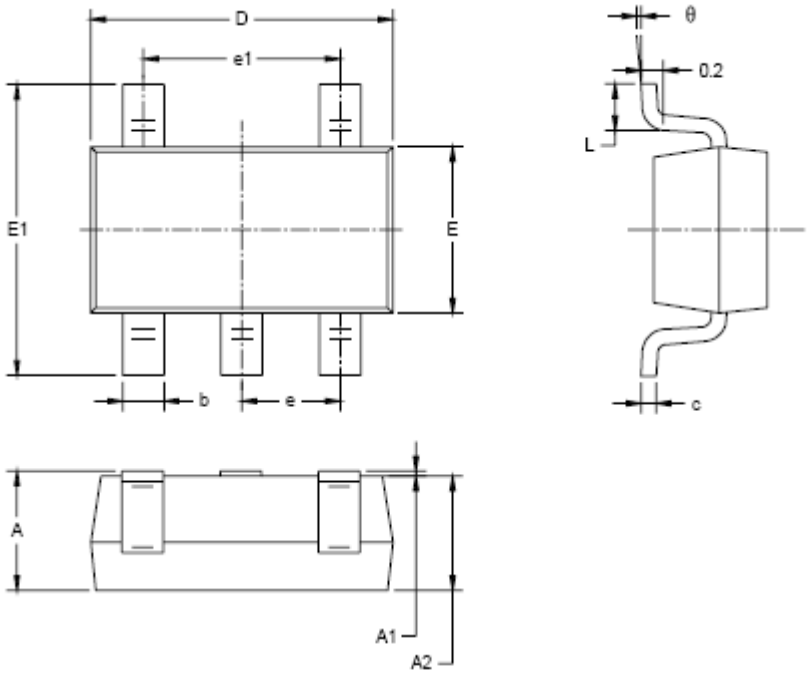

Symbol	Dimensions In Millimeters		Dimensions In Inches	
	MIN	MAX	MIN	MAX
A	1.050	1.250	0.041	0.049
A1	0.000	0.100	0.000	0.004
A2	1.050	1.150	0.041	0.045
b	0.300	0.500	0.012	0.020
c	0.100	0.200	0.004	0.008
D	2.820	3.020	0.111	0.119
E	1.500	1.700	0.059	0.067
E1	2.650	2.950	0.104	0.116
e	0.950 BSC		0.037 BSC	
e1	1.900 BSC		0.075 BSC	
L	0.300	0.600	0.012	0.024
θ	0°	8°	0°	8°

SOT23-6

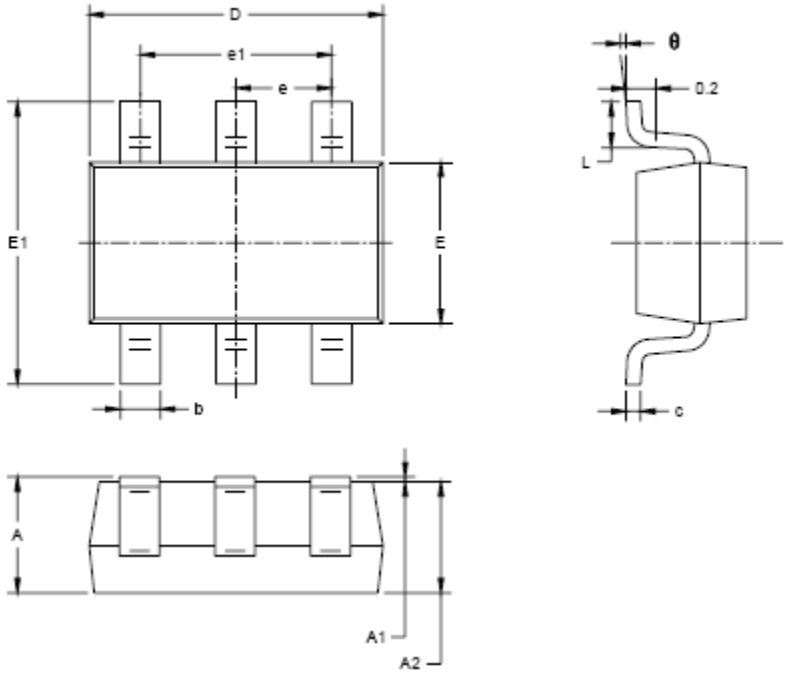

Symbol	Dimensions In Millimeters		Dimensions In Inches	
	MIN	MAX	MIN	MAX
A	1.050	1.250	0.041	0.049
A1	0.000	0.100	0.000	0.004
A2	1.050	1.150	0.041	0.045
b	0.300	0.500	0.012	0.020
c	0.100	0.200	0.004	0.008
D	2.820	3.020	0.111	0.119
E	1.500	1.700	0.059	0.067
E1	2.650	2.950	0.104	0.116
e	0.950 BSC		0.037 BSC	
e1	1.900 BSC		0.075 BSC	
L	0.300	0.600	0.012	0.024
θ	0°	8°	0°	8°

MSOP-10

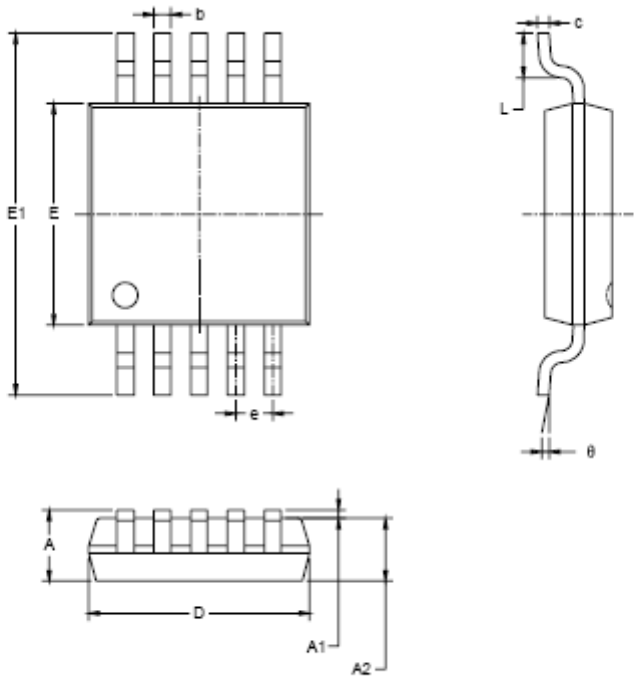

Symbol	Dimensions In Millimeters		Dimensions In Inches	
	MIN	MAX	MIN	MAX
A	0.820	1.100	0.032	0.043
A1	0.020	0.150	0.001	0.006
A2	0.750	0.950	0.030	0.037
b	0.180	0.280	0.007	0.011
c	0.090	0.230	0.004	0.009
D	2.900	3.100	0.114	0.122
E	2.900	3.100	0.114	0.122
E1	4.750	5.050	0.187	0.199
e	0.500 BSC		0.020 BSC	
L	0.400	0.800	0.016	0.031
θ	0°	6°	0°	6°

SC70-5

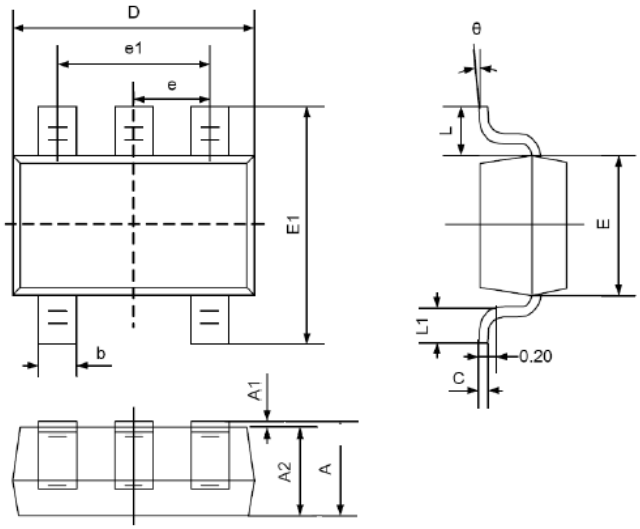

Symbol	Dimensions In Millimeters		Dimensions In Inches	
	Min	Max	Min	Max
A	0.900	1.100	0.035	0.043
A1	0.000	0.100	0.000	0.004
A2	0.900	1.000	0.035	0.039
b	0.150	0.350	0.006	0.014
C	0.080	0.150	0.003	0.006
D	2.000	2.200	0.079	0.087
E	1.150	1.350	0.045	0.053
E1	2.150	2.450	0.085	0.096
e	0.650TYP		0.026TYP	
e1	1.200	1.400	0.047	0.055
L	0.525REF		0.021REF	
L1	0.260	0.460	0.010	0.018
θ	0°	8°	0°	8°

SOP-14

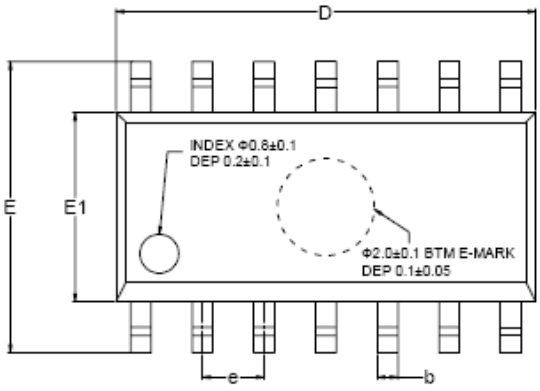

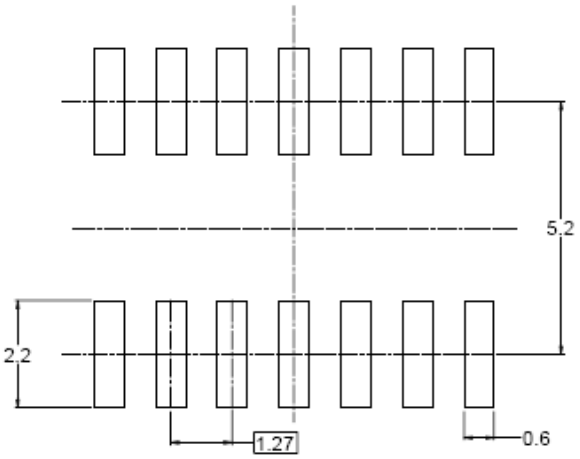

RECOMMENDED LAND PATTERN (Unit: mm)

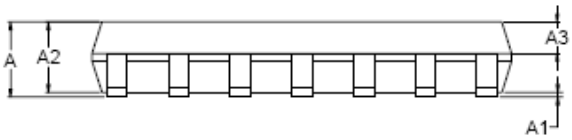

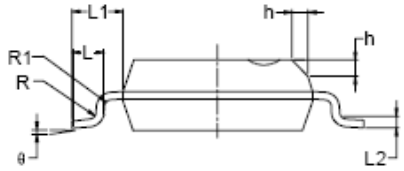

Symbol	Dimensions In Millimeters			Dimensions In Inches		
	MIN	MOD	MAX	MIN	MOD	MAX
A	1.35		1.75	0.053		0.069
A1	0.10		0.25	0.004		0.010
A2	1.25		1.65	0.049		0.065
A3	0.55		0.75	0.022		0.030
b	0.36		0.49	0.014		0.019
D	8.53		8.73	0.336		0.344
E	5.80		6.20	0.228		0.244
E1	3.80		4.00	0.150		0.157
e	1.27 BSC			0.050 BSC		
L	0.45		0.80	0.018		0.032
L1	1.04 REF			0.040 REF		
L2	0.25 BSC			0.01 BSC		
R	0.07			0.003		
R1	0.07			0.003		
h	0.30		0.50	0.012		0.020
θ	0°		8°	0°		8°

TSSOP-14

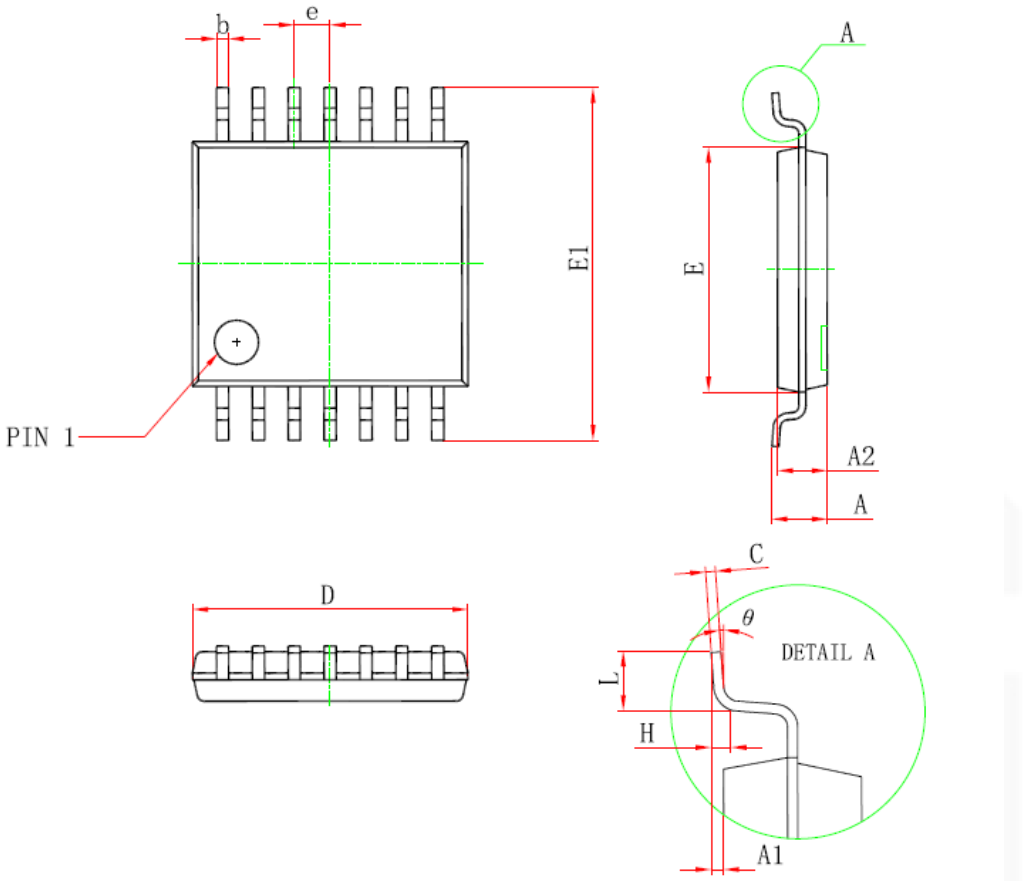

Symbol	Dimensions In Millimeters		Dimensions In Inches	
	Min	Max	Min	Max
D	4.900	5.100	0.193	0.201
E	4.300	4.500	0.169	0.177
b	0.190	0.300	0.007	0.012
c	0.090	0.200	0.004	0.008
E1	6.250	6.550	0.246	0.258
A		1.200		0.047
A2	0.800	1.000	0.031	0.039
A1	0.050	0.150	0.002	0.006
e	0.65 (BSC)		0.026(BSC)	
L	0.500	0.700	0.020	0.028
H	0.25(TYP)		0.01(TYP)	
θ	1°	7°	1°	7°

DFN-8

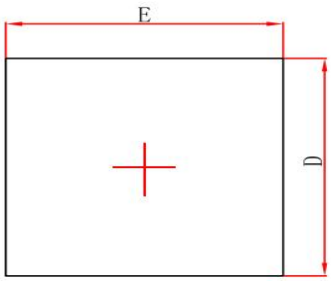

Top View

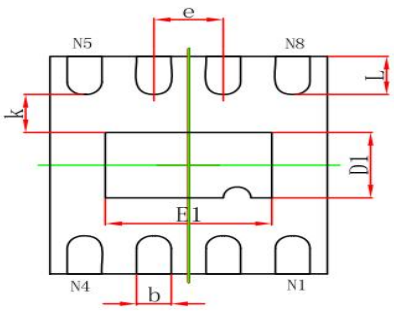

Bottom View

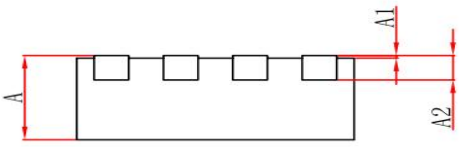

Side View

Symbol	Dimensions In Millimeters		Dimensions In Inches	
	Min.	Max.	Min.	Max.
A	0.700	0.800	0.028	0.031
A1	0.000	0.050	0.000	0.002
A2	0.153	0.253	0.006	0.010
D	1.900	2.100	0.075	0.083
E	1.900	2.100	0.075	0.083
D1	0.500	0.700	0.020	0.028
E1	1.100	1.300	0.043	0.051
k	0.200MIN.		0.008MIN.	
b	0.180	0.300	0.007	0.012
e	0.500TYP.		0.020TYP.	
L	0.250	0.450	0.010	0.018

SC70-6

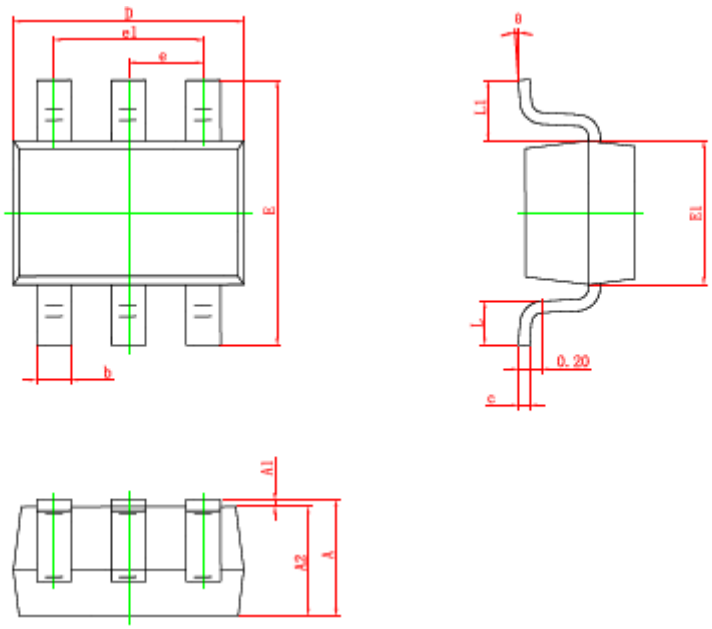

Symbol	Dimensions In Millimeters		Dimensions In Inches	
	Min.	Max.	Min.	Max.
A	0.900	1.100	0.035	0.043
A1	0.000	0.100	0.000	0.004
A2	0.900	1.000	0.035	0.039
b	0.150	0.350	0.006	0.014
c	0.080	0.150	0.003	0.006
D	2.000	2.200	0.079	0.087
E	2.150	2.450	0.085	0.096
E1	1.150	1.350	0.045	0.053
e	0.650 TYP.		0.026 TYP.	
e1	1.200	1.400	0.047	0.055
L	0.260	0.460	0.010	0.018
L1	0.525 REF.		0.021 REF.	
θ	0°	8°	0°	8°