迈诺斯科技

MPG20P10P

100V P-Channel Power MOSFET

Description

The MPG20P10P, uses advanced trench technology to provide excellent $R_{DS(ON)}$, low gate charge. It can be used in a wide variety of applications.

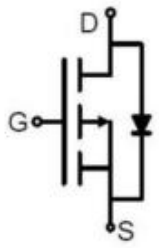

Schematic diagram

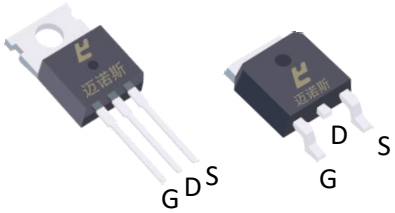

TO-220 TO-252

General Features

① V_{DS}=-100V,I_D=-20A
$R_{DS(ON)}$ < 80mΩ @ V_{GS}=-10V
$R_{DS(ON)}$ < 90mΩ @ V_{GS}=-4.5V
② High density cell design for lower R_{dson}
③ Fully characterized avalanche voltage and current
④ Good stability and uniformity with high EAS
⑤ Excellent package for good heat dissipation

Application

① Power switching application
② Hard switched and High frequency circuits
③ Uninterruptible power supply

Package Marking And Ordering Information

Ordering Codes	Package	Product Code	Packing
MPG20P10D	TO-252	MDT20P10D	Reel
MPG20P10P	TO-220	MPG20P10P	Tube

Absolute Maximum Ratings (T_A=25℃ unless otherwise noted)

Symbol	Parameter	Rating	Units
V_{DS}	Drain-Source Voltage	-100	V
V_{GS}	Gate-Source Voltage	±20	V
I_D	Drain Current-Continuous	-20	A
I_{DM}	Drain Current-Pulsed (Note 1)	-20	A
P_D	Maximum Power Dissipation(T_A=25℃)	72	W
E_{AS}	Single pulse avalanche energy(Note 2)	80	mJ
T_J,T_{STG}	Operating Junction and Storage Temperature Range	-55 To 175	℃

Thermal Characteristic

Symbol	Parameter	Rating	Units
$R_{\theta JC}$	Thermal Resistance,Junction-to-Case	2.12	℃/W

Electrical Characteristics (T_A=25℃ unless otherwise noted)

Symbol	Parameter	Condition	Min.	Typ.	Max.	Units
Off Characteristics						
BV_{DSS}	Drain-Source Breakdown Voltage	V_{GS}=0V I_D=-250μA	-100	-	-	V
I_{DSS}	Zero Gate Voltage Drain Current	V_{DS}=-100V,V_{GS}=0V	-	-	-1	μA
I_{GSS}	Gate-Body Leakage Current	V_{GS}=±20V,V_{DS}=0V	-	-	±100	nA
On Characteristics						
$V_{GS(th)}$	Gate Threshold Voltage	V_{DS}=V_{GS},I_D=-250μA	-1.0	-1.7	-2.4	V
$R_{DS(ON)}$	Drain-Source On-State Resistance(Note 3)	V_{GS}=-10V, I_D=-10A	-	70	80	mΩ
		V_{GS}=-4.5V, I_D=-10A	-	80	90	
g_{FS}	Forward Transconductance	V_{DS}=-50V,I_D=-10A	-	7.2	-	S
Dynamic Characteristics						
C_{lss}	Input Capacitance	V_{DS}=-50V,V_{GS}=0V, f=1.0MHz	-	2360	-	pF
C_{oss}	Output Capacitance		-	81	-	pF
C_{rss}	Reverse Transfer Capacitance		-	67	-	pF
Switching Characteristics (Note 4)						
$t_{d(on)}$	Turn-on Delay Time	V_{DD}=-50V, I_D=-20A, V_{GS}=-10V,R_{GEN}=10Ω	-	20	-	nS
t_r	Turn-on Rise Time		-	11	-	nS
$t_{d(off)}$	Turn-Off Delay Time		-	100	-	nS
t_f	Turn-Off Fall Time			38	-	nS
Q_g	Total Gate Charge	V_{DS}=-50V,I_D=-20A V_{GS}=-10V	-	71	-	nC
Q_{gs}	Gate-Source Charge		-	13	-	nC
Q_{gd}	Gate-Drain Charge		-	13	-	nC
Drain-Source Diode Characteristics						
V_{SD}	Diode Forward Voltage	V_{GS}=0V,I_S=-10A	-	-	-1.2	V

Notes:

1. Repetitive Rating: Pulse width limited by maximum junction temperature.
2. 2.EAS condition :T_j=25℃,V_{DD}=-50V,V_{GS}=-10V,L=0.5mH,R_g=25Ω
3. Pulse Test: Pulse Width ≤ 300μs, Duty Cycle ≤ 2%.Guaranteed by design, not subject to production

Characteristics Curves

Figure 1 Output Characteristics

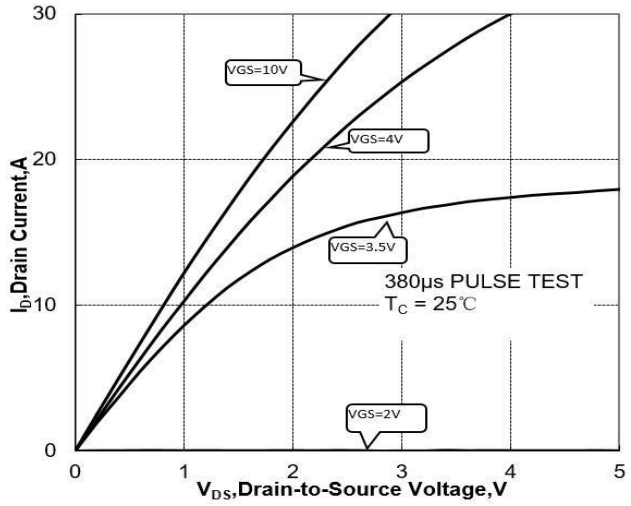

Figure 2 Transfer Characteristics

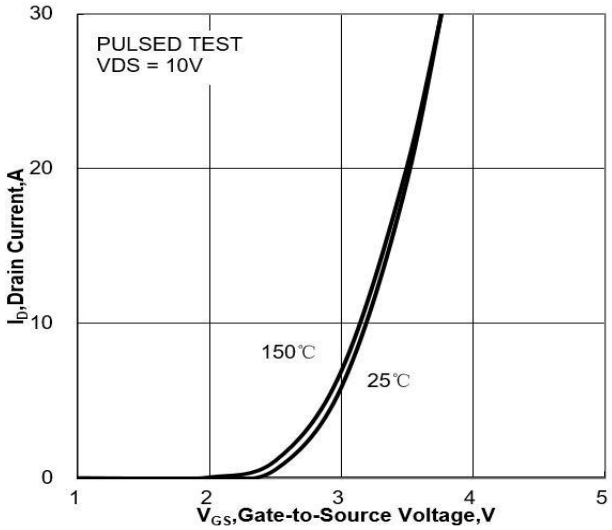

Figure 3 On-Resistance vs. I_D and V_{GS}

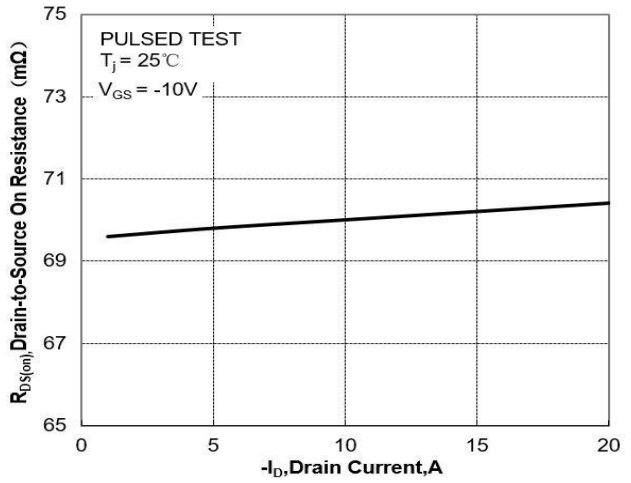

Figure 4 On-Resistance vs. Junction Temperature

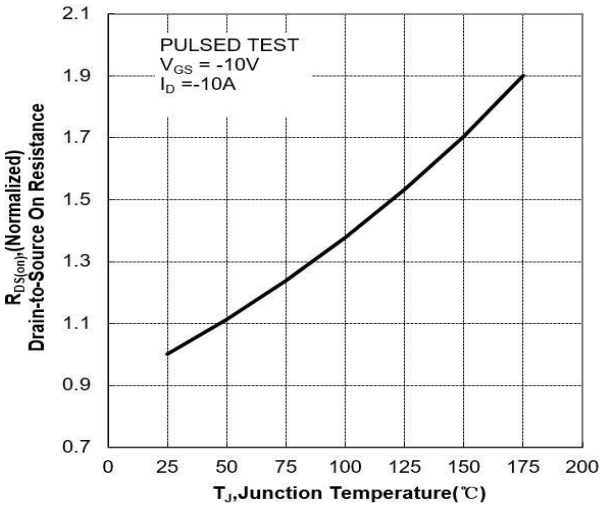

Figure 5 On-Resistance vs. V_{GS}

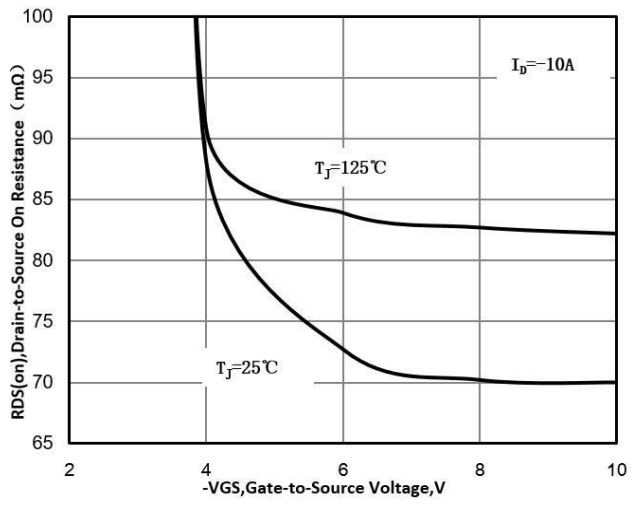

Figure 6 Body Diode Forward Voltage

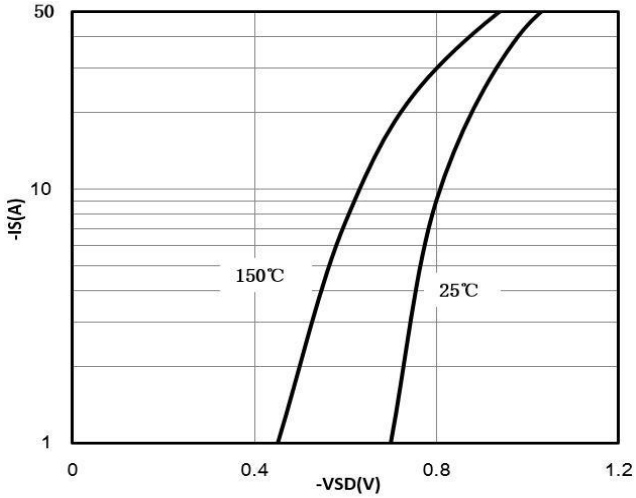

Figure 7 Gate-Charge Characteristics

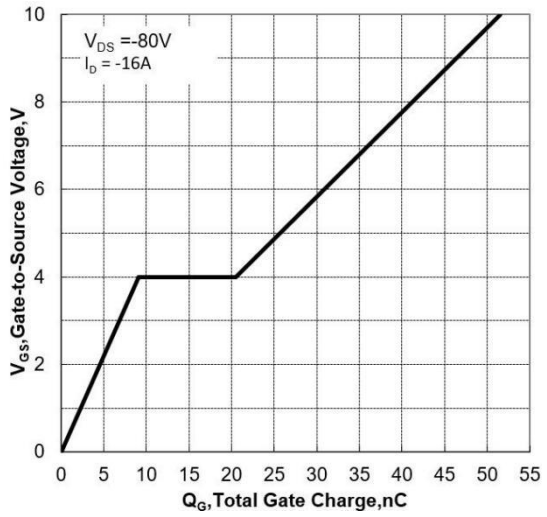

Figure 8 Capacitance Characteristics

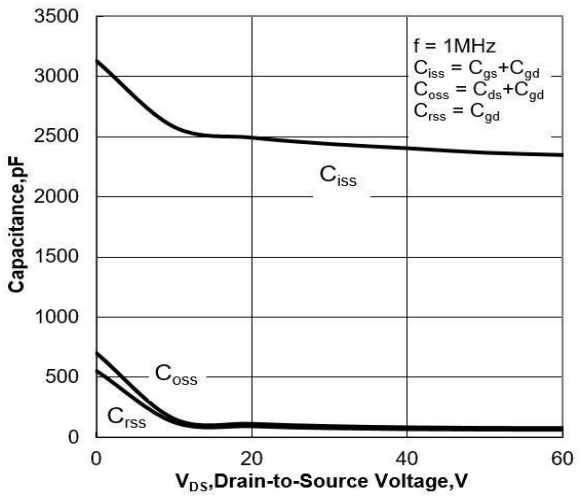

Figure 9 Maximum Forward Biased Safe Operation Area

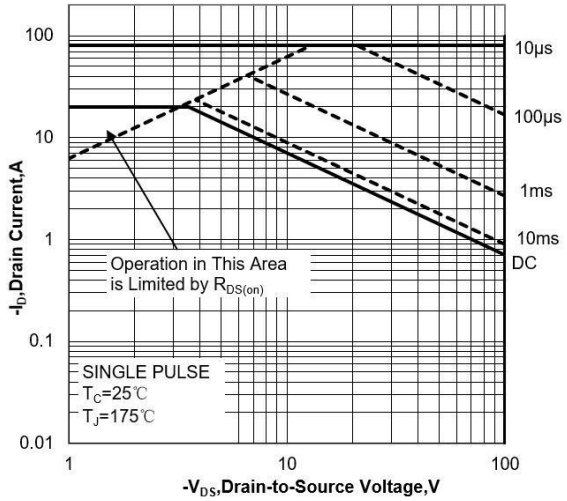

Figure 10 Single Pulse Power Rating Junction-to-Ambient

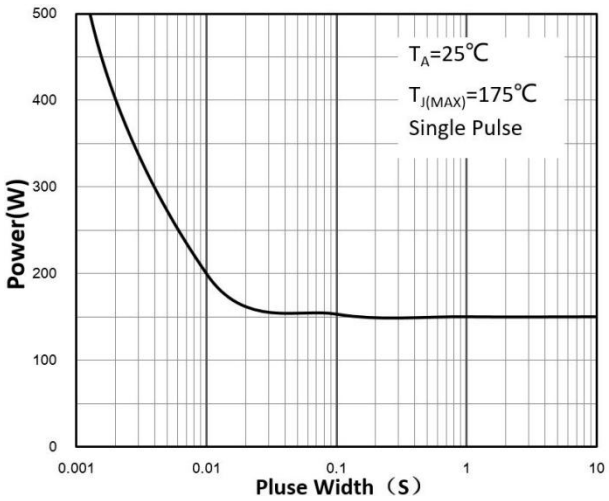

Figure 11 Normalized Maximum Transient Thermal Impedance

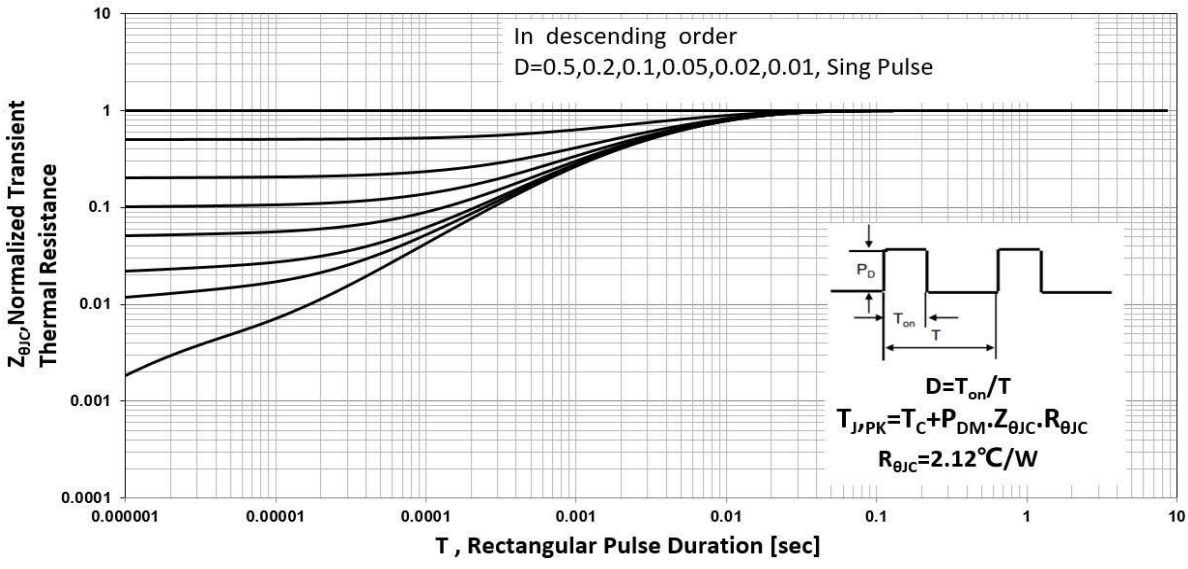

Test Circuit and Waveform

Gate Charge Test Circuit	Gate Charge Test Waveform
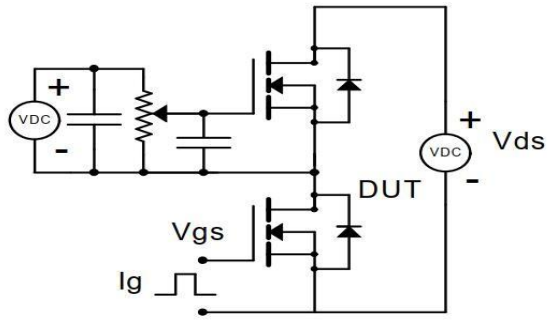	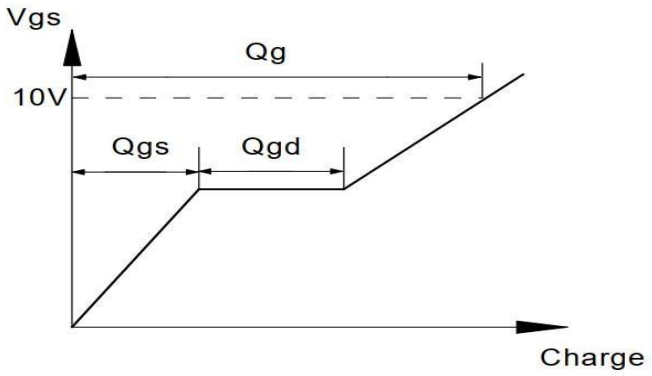
Resistive Switching Test Circuit	**Resistive Switching Test Waveforms**
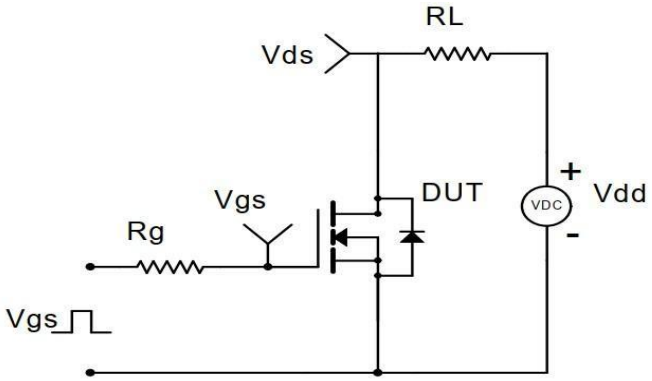	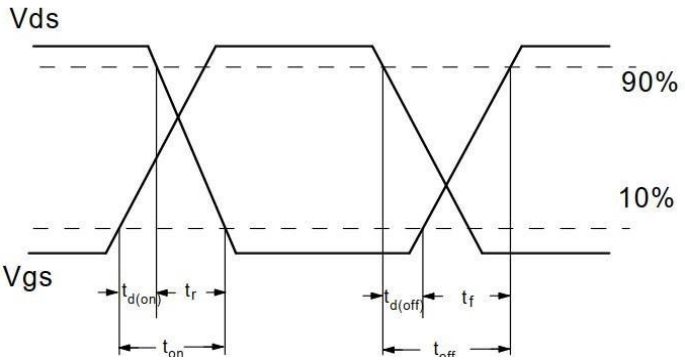
Unclamped Inductive Switching (UIS) Test Circuit	**Unclamped Inductive Switching (UIS) Test Waveforms**
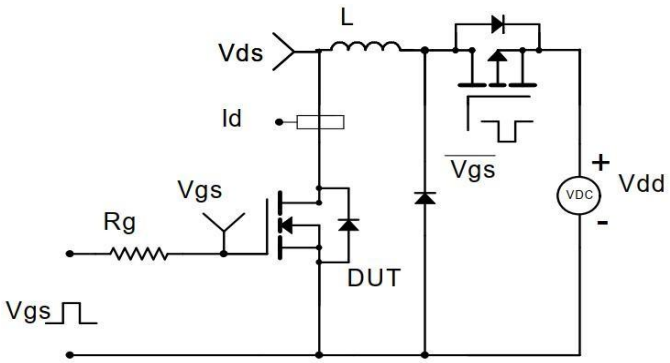	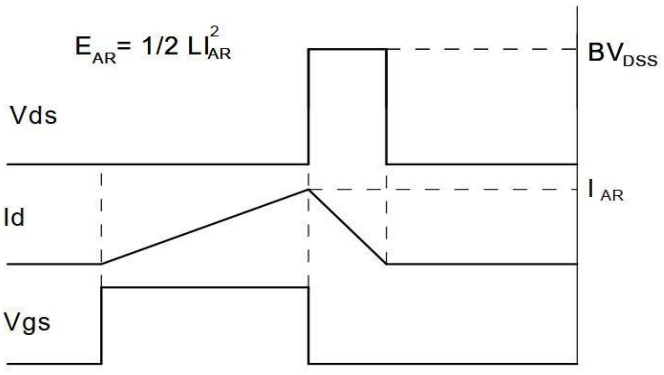

Package Description

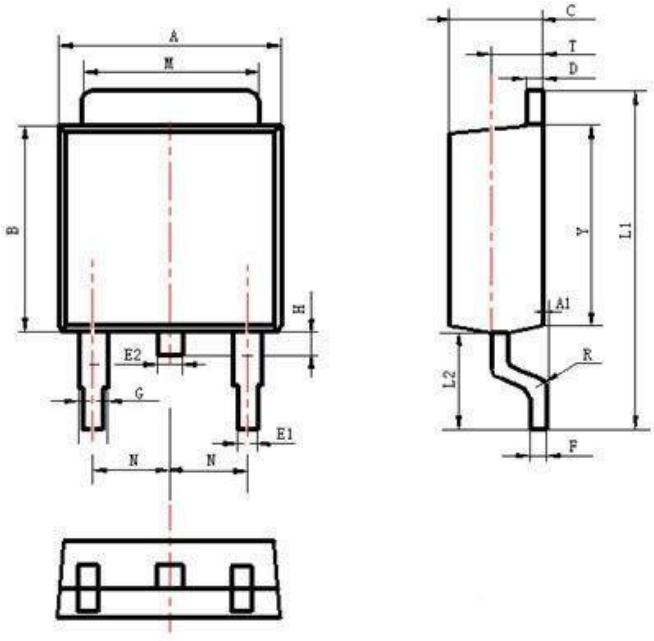

Items	Values(mm)	
	MIN	MAX
A	6.30	6.90
A1	0	0.13
B	5.70	6.30
C	2.10	2.50
D	0.30	0.60
E1	0.60	0.90
E2	0.70	1.00
F	0.30	0.60
G	0.70	1.20
L1	9.60	10.50
L2	2.70	3.10
H	0.60	1.00
M	5.10	5.50
N	2.09	2.49
R	0.3	
T	1.40	1.60
Y	5.10	6.30

TO-252 Package

Package Description

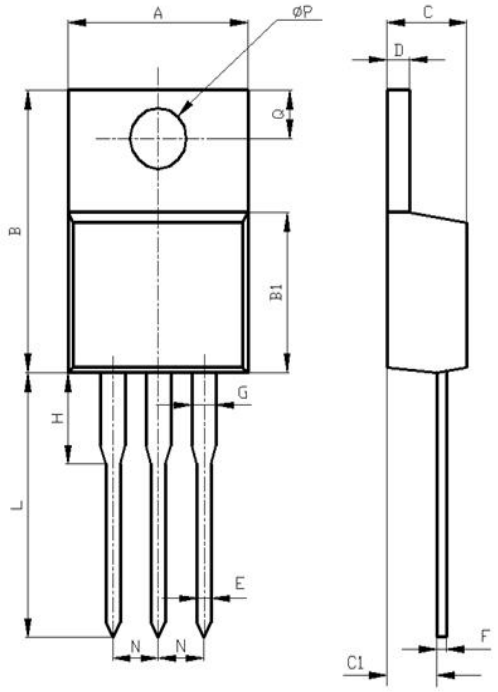

Items	Values(mm)	
	MIN	MAX
A	9.60	10.6
B	15.0	16.0
B1	8.90	9.50
C	4.30	4.80
C1	2.30	3.10
D	1.20	1.40
E	0.70	0.90
F	0.30	0.60
G	1.17	1.37
H	2.70	3.80
L	12.6	14.8
N	2.34	2.74
Q	2.40	3.00
ΦP	3.50	3.90

TO-220 Package

NOTE:

1. Exceeding the maximum ratings of the device in performance may cause damage to the device, even the permanent failure, which may affect the dependability of the machine. Please do not exceed the absolute maximum ratings of the device when circuit designing.
2. When installing the heat sink, please pay attention to the torsional moment and the smoothness of the heat sink.
3. MOSFETs is the device which is sensitive to the static electricity, it is necessary to protect the device from being damaged by the static electricity when using it.
4. Shenzhen Minos reserves the right to make changes in this specification sheet and is subject to change without prior notice.

CONTACT:

深圳市迈诺斯科技有限公司（总部）

地址：深圳市福田区华富街道田面社区深南中路4026号田面城市大厦16D

邮编：518025

电话：0755-83273777