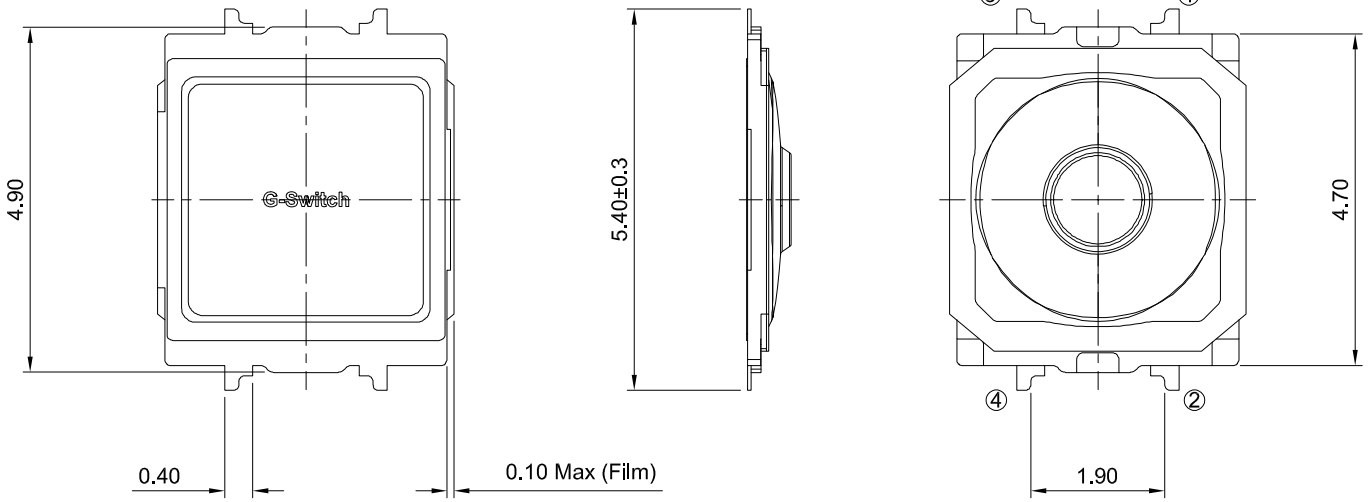

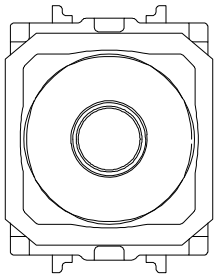

GT-TC225B-H0063-L10

G-Switch

Operating Force
B=250gf

Switch Height（mm）
H0063=0.63

Switch lifetime (Force)
L10=1,000,000 Cycles

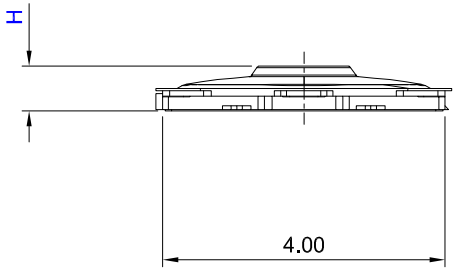

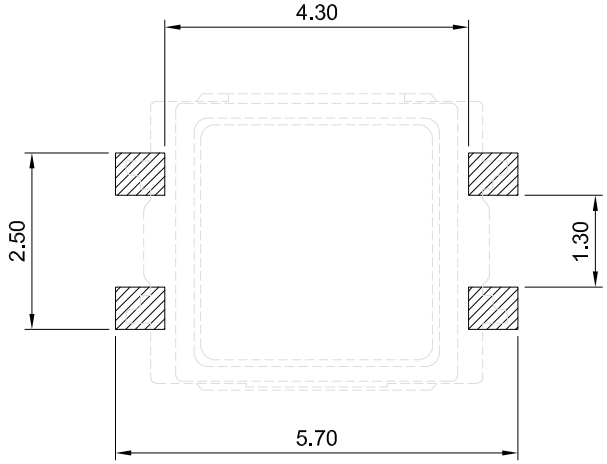

PCB REFERENCE DIAGRAM
TOLERANCE:±0.05

G-Switch Specification:
1.Operating temperature range: -40°C ~ +85°C
2.Rating: 50mA.12V DC
3.Insulation resistance: 100MΩ min.100V DC
4.Dielectric strength: 250V AC for 1 min
5.Contact resistance:100mΩ max
6.Travel: 0.23±0.10mm
7.Waterproof grade: IPX7

NO.	PART NAME	MATERIAL	REMARK
6	ADHESIVE TAPE	KAPTON	YELLOW
5	TERMINAL	PHOSPHOR BRONZE	Ag PLATING
4	STEM	HIGH TEMPERATURE PLASTIC	BLACK
3	TAPE	HIGH TEMPERATURE PLASTIC	
2	CONTACT	SUS	Ag PLATING
1	BASE	HIGH TEMPERATURE PLASTIC	BLACK

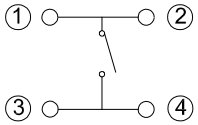

CIRCUIT DIAGRAM

Pb Process Capable
RoHS Compliant 2002/95/EC

SCALE: 1:1	UNIT: mm	Title:	Vertical Tact Switch SMT 4.9×4.0×H0.63mm
SIZE: A4			
Unless otherwise General Tolerance: X. ±0.40, X.x ±0.30, X.xx ±0.20, X.xxx ±0.10, Angles ±3°		Molde Code:	GT-TC225B-H0063-L10

DRAWN	CHECKED	APPROVED	DATE
Lal	Chen	Chen	2025.10.28

品赞科技 G-Switch ®

REV: A0 SHEET: 1/1