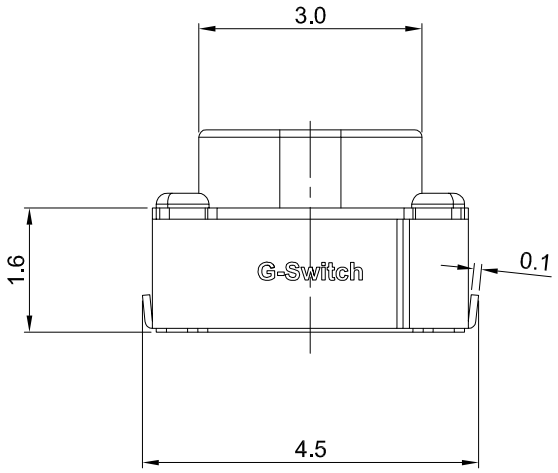

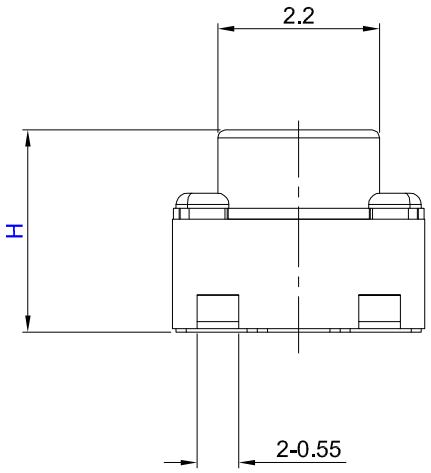

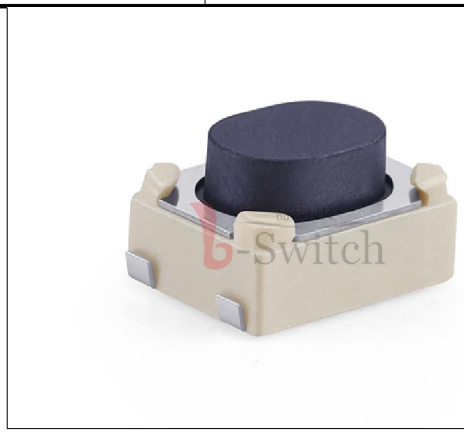

GT-TD048X-HXXX-L1 X

G-Switch

Operating Force
A=160gf B=250gf
E=230gf G=80gf

Switch Height (mm)
H025=2.50 H027=2.70
H030=3.00

Switch Lifetime
L1=100,000 Cycles

Button Color
B=Black
U=Blue
W=White

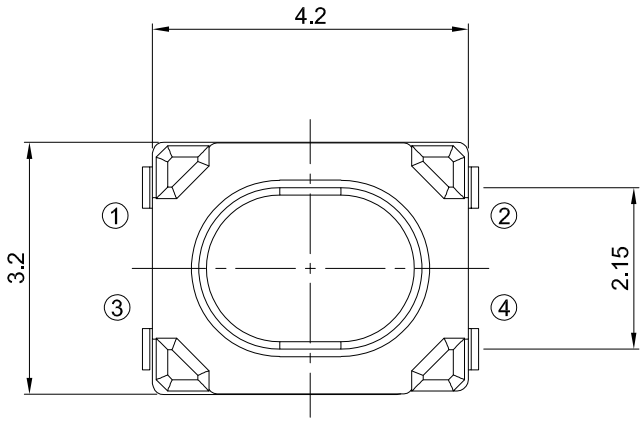

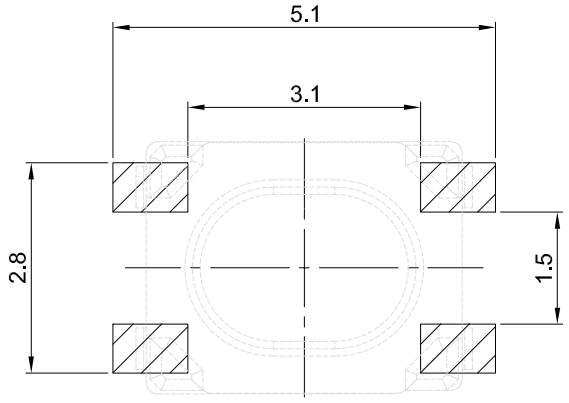

PCB REFERENCE DIAGRAM
TOLERANCE:±0.05

G-Switch Specification:
1.Operating temperature range: -40°C ~ +85°C
2.Rating: 50mA.12V DC
3.Insulation resistance: 100MΩ min.100V DC
4.Dielectric strength: 250V AC for 1 min
5.Contact resistance: 100mΩ max.
6.Travel: 0.20±0.1mm

NO.	PART NAME	MATERIAL	REMARK
5	COVER	STAINLESS STEEL	
4	STEM	LCP/PPA/SILICONE	BLACK/BLUE/WHITE
3	CONTACT	STAINLESS STEEL	Ag PLATING
2	BASE	LCP	BLACK/WHITE
1	TERMINAL	PHOSPHOR BRONZE	Ag PLATING

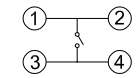

CIRCUIT DIAGRAM

Pb Process Capable
RoHS Compliant
EU RoHS Standards

SCALE: 1:1	UNIT: mm	Title:	Vertical Tact Switch SMT 4.2×3.2×Hmm
SIZE: A4			
Unless otherwise General Tolerance: X. ±0.40, X.x ±0.30, X.xx ±0.20, X° ±3°		Molde Code:	GT-TD048X-HXXX-L1X

DRAWN	CHECKED	APPROVED	DATE
Lal	Chen	Chen	2025.10.27

品赞科技 G-Switch ®
www.dg-switch.com

REV: A0 SHEET: 1/1