www.dzyjzj.com Tel:0755-27575531 Fax:0755-27576267

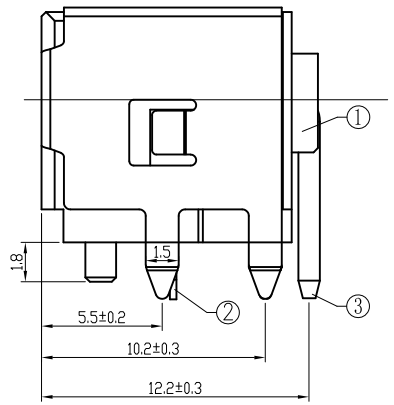

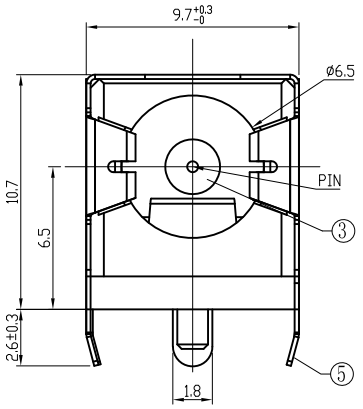

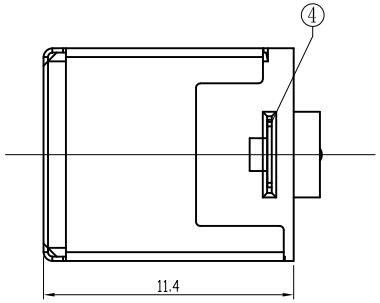

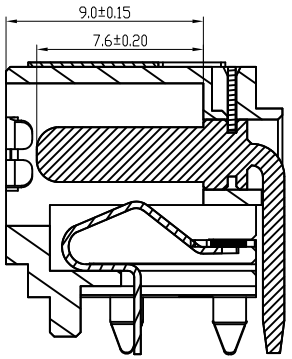

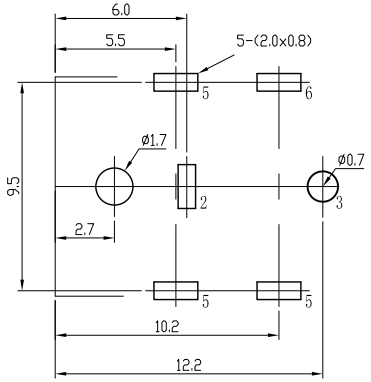

P.C.B LAYOUT
TOP VIEW

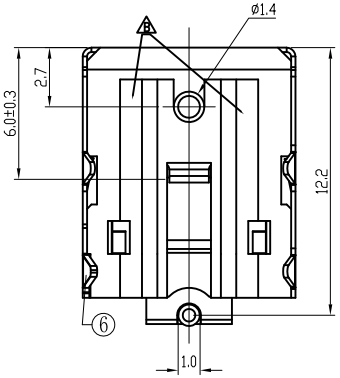

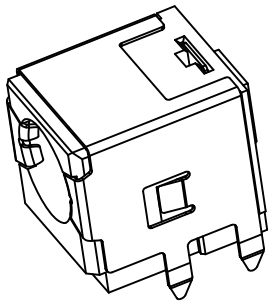

PIN	ø2.0	ø2.5

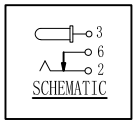

SPECIFICATION

1. Rating : DC 20V 5A;
2. Contact resistance: ≤0.03Ω;
3. Insulation resistance: ≥100MΩ (DC250V);
4. Withstand voltage: 500VAC ;
5. Insertion and extraction force: 3-40N;
6. life test: 5,000 cycles。

NO.	DESCRIPTION	QTY	MATERIAL	PLATING
6	CONTACT FOOT	1	BRASS	Ag-Plating
5	CONTACT FOOT	1	SUS301	Ni-Plating
4	STOPPER	1	SUS301	———
3	PIN	1	BRASS	Ni-Plating
2	SPRING PIECE	1	BRONZE	Ag-Plating
1	HOUSING	1	PA9T	———

深圳市华宇创精密电子有限公司

TOLERANCE: X.X ±0.30, X.XX ±0.25, X.XXX ±0.15, X.° ±2°, X.X° ±0.5°	DRAWED BY : 陈一鸣	DATE : 2014-02-23	PART NAME: DC-3035
	CHECKED BY: 马跃	DATE : 2014-02-23	PART NO. HYCW-DC3035-XXXB
UNIT: mm [inch]	APPROVED BY: 邱敏	DATE : 2014-02-23	MOLD NO.
SCALE:1:1 SIZE: A4			DRAW NO: HYC-2610191123
			SHEET NO. 1 OF 1