www.dzyjzj.com Tel:0755-27575531 Fax:0755-27576267

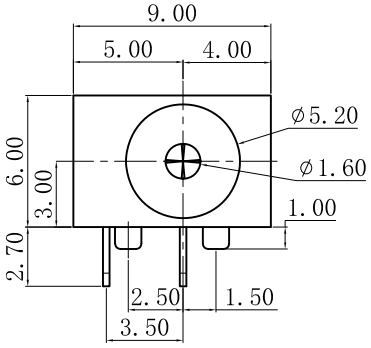

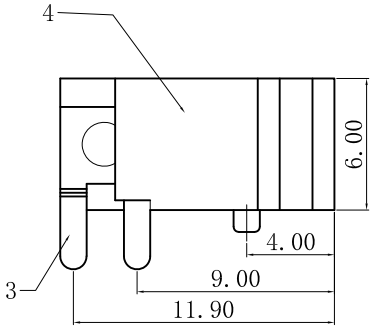

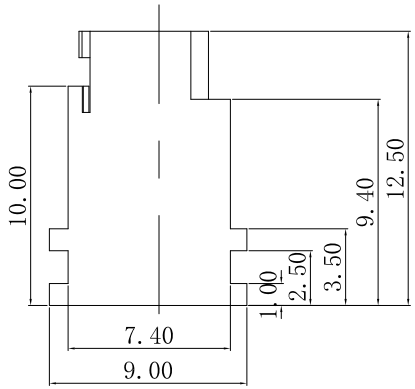

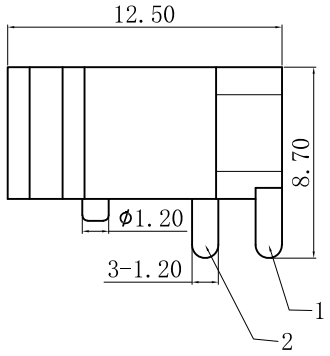

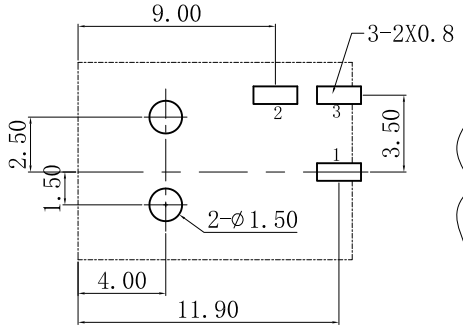

PCB板开孔尺寸

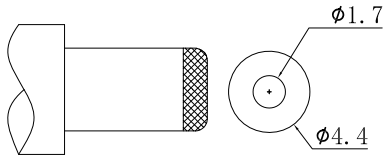

适配公头

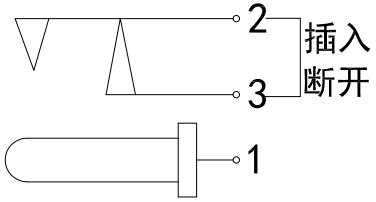

功能图

SPECIFICATION

1. Rating : DC 30V 5A;
2. Contact resistance: ≤30mΩ;
3. Insulation resistance: ≥100MΩ (DC250V);
4. Withstand voltage: 500VAC ;
5. Insertion and extraction force: 3-30N;
6. life test: 5,000 cycles。

序号	零件代号	数量	零件名称	零件材料	镀层/颜色
④	DC-049-4	1PCS	塑胶基座	PBT	黑色
③	DC-049-3	1PCS	回路引脚	黄铜T=0.35	镀铜锡
②	DC-049-2	1PCS	负极弹片	磷铜T=0.25	镀铜锡
①	DC-049-1	1PCS	正极引脚	黄铜T=0.35	镀铜锡

深圳市华宇创精密电子有限公司

TOLERANCE: X.X ±0.30, X.XX ±0.25, X.XXX ±0.15, X.° ±2°, X.X° ±0.5°	DRAWED BY : 陈一鸣	DATE : 2014-02-23	PART NAME: DC-049
	CHECKED BY: 马跃	DATE : 2014-02-23	PART NO. HYCW-DC049-160B
			MOLD NO.
UNIT: mm [inch]	APPROVED BY: 邱敏	DATE : 2014-02-23	DRAW NO: HYC-2610161614
SCALE:1:1 SIZE: A4			SHEET NO. 1 OF 1