www.dzyjzj.com Tel:0755-27575531 Fax:0755-27576267

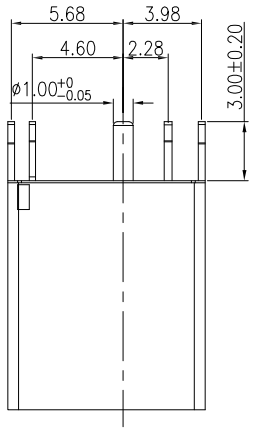

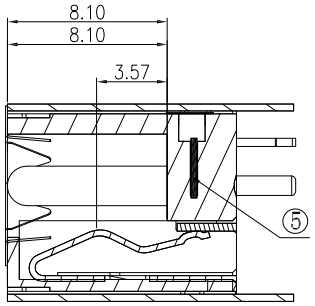

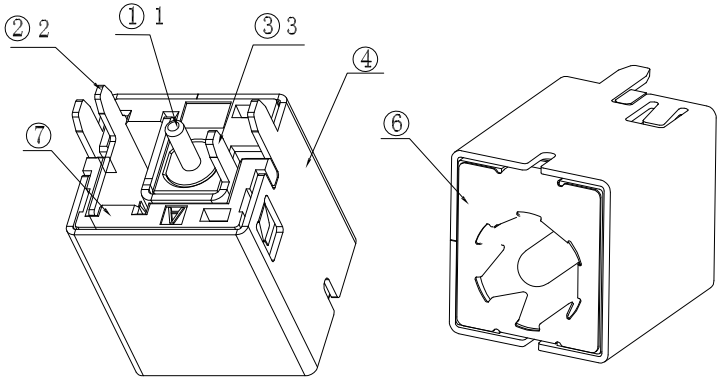

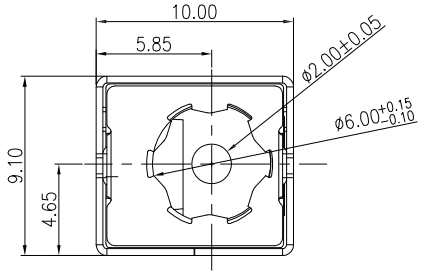

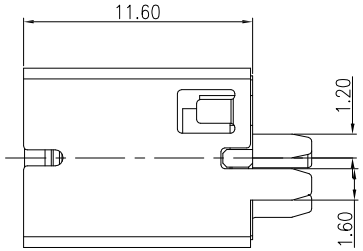

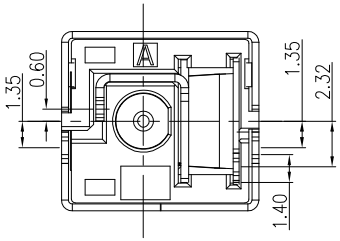

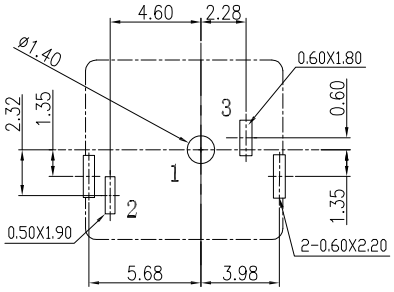

RECOMMENDED P.C.B LAYOUT
TOP VIEW(TOLERANCES:±0.05)

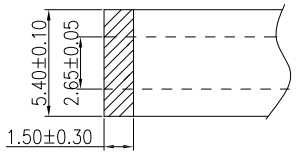

MATE PLUG

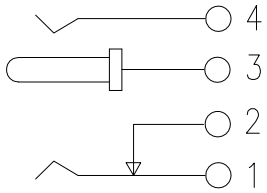

CIRCUIT DIAGRAM

SPECIFICATIONS:

1. ELECTRICAL CHARACTERISTICS:
   1-1. RATING: 20V 3A
   1-2. CONTACT RESISTANCE: 30mΩ MAX.(INITIAL)
   1-3. DIELECTRIC WITHSTANDING VOLTAGE: 500V AC FOR ONE MINUTE
   1-4. INSULATION RESISTANCE: 100MΩ MIN. MEASURED BY 500V DC
2. MECHANICAL CHARACTERISTICS:
   2-1. INSERTION FORCE : 0.3~3.0 KGF
   2-2. WITHDRAWAL FORCE : 0.3~3.0 KGF
3. LIFE TEST: 5,000 CYCLES MIN.
4. FOR REFLOW SOLDERING LEAD-FREE PROCESS.
5. * REPRESENT CRITICAL DIMENSIONS.

NO.	QTY	MATERIAL	PLATING & COLOR
⑦	1	PA-9T(Black)无卤阻燃	
⑥	1	SUS301H t=0.10	Ni50u"
⑤	1	SPCC t=0.30	Ni50u"
④	1	BRSS t=0.35	Sn 80u"
③	1	BRASS t=0.40	Ag 10u"
②	1	PHOSPHOR BRONZE t=0.30	Ag 10u"
①	1	H59	Ag 10u"

深圳市华宇创精密电子有限公司

TOLERANCE: X.X ±0.30, X.XX ±0.25, X.XXX ±0.15, X.° ±2°, X.X° ±0.5°	DRAWED BY : 陈一鸣	DATE : 2014-02-23	PART NAME: DC-051AB
	CHECKED BY: 马跃	DATE : 2014-02-23	PART NO. HYCW-DC051AB-200B
UNIT: mm [inch]			MOLD NO.
	APPROVED BY: 邱敏	DATE : 2014-02-23	DRAW NO: HYC-2610161548
SCALE:1:1 SIZE: A4			SHEET NO. 1 OF 1