www.dzyjzj.com Tel:0755-27575531 Fax:0755-27576267

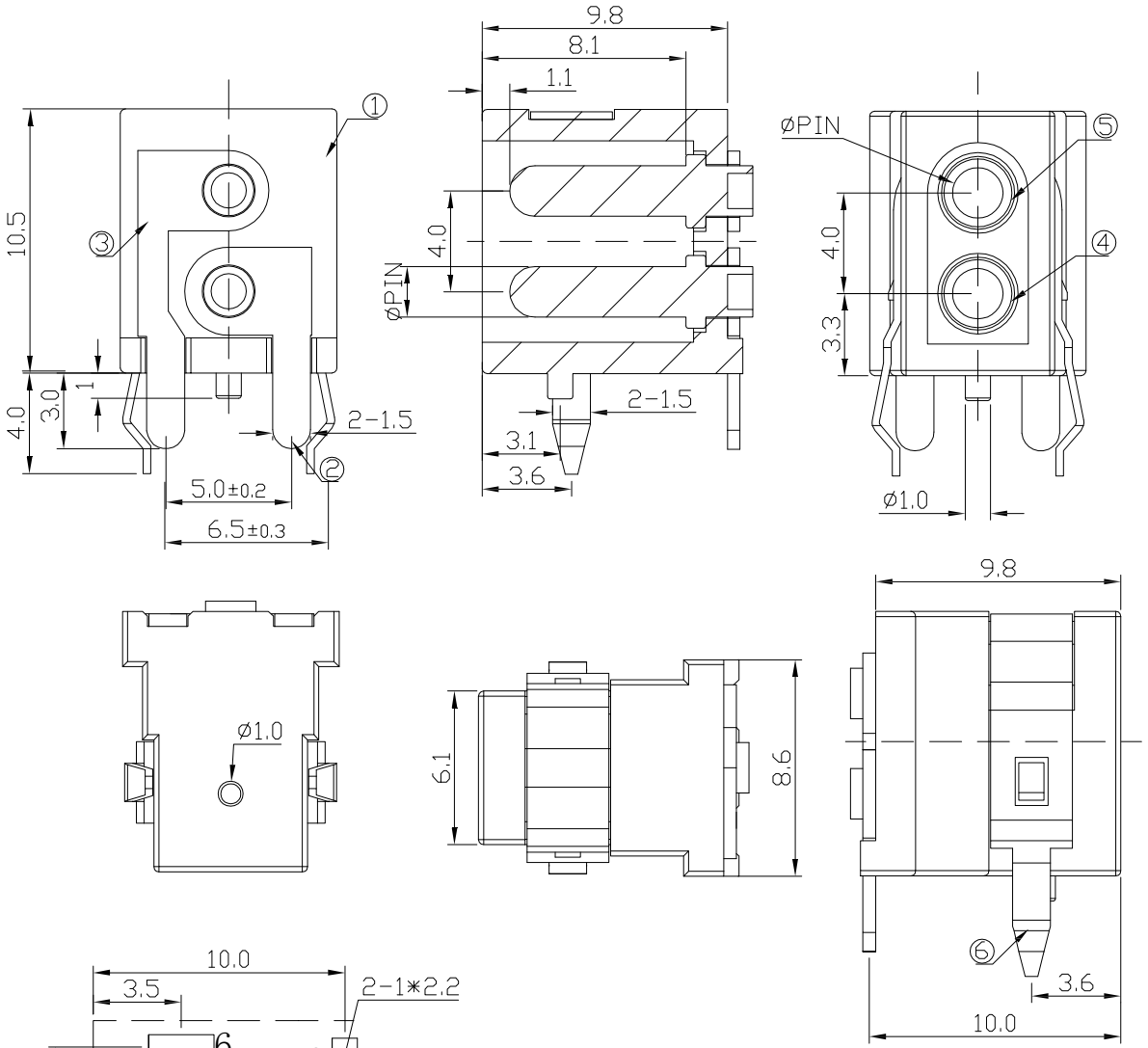


T:1.6 Dimensions of PC board holes
Tolerance : ±0.1(Printed-sided view)

SCHEMATIC

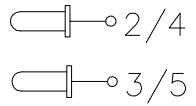


| PIN | Φ2.1 | Φ2.5 |
|---|---|---|
| APPD | | |

SPECIFICATION

1.Rating : DC 30V 5A;
2.Contact resistance: ≤0.03Ω;
3.Insulation resistance: ≥100MΩ (DC250V);
4.Withstand voltage: 500VAC ;
5.Insertion and extraction force: 3-20N;
6.life test: 5,000 cycles。

| NO. | DESCRIPTION | QTY | MATERIAL | PLATING |
|---|---|---|---|---|
| 6 | COVER | 1 | | |
| 5 | CONTACT | 1 | H59 BRASS | Cu-Sn-Plating |
| 4 | FOOT PIN | 1 | H59 BRASS | Cu-Sn-Plating |
| 3 | SPRING | 1 | H62 BRASS | Ag-Plating |
| 2 | FLAT PIECE | 1 | H62 BRASS | Ag-Plating |
| 1 | HOUSING | 1 | PA66 | |

深圳市华宇创精密电子有限公司

| | | | |
|---|---|---|---|
| TOLERANCE: X.X ±0.30, X.XX ±0.25, X.XXX ±0.15, X.° ±2°, X.X° ±0.5° | DRAWED BY: 陈一鸣 | DATE: 2014-02-23 | PART NAME: AC-201 |
| UNIT: mm [inch] | CHECKED BY: 马跃 | DATE: 2014-02-23 | PART NO. HYCW-AC201-XXXB |
| SCALE:1:1 SIZE: A4 | APPROVED BY: 邱敏 | DATE: 2014-02-23 | MOLD NO. / DRAW NO: HYC-2610141134 |
| | | | SHEET NO. 1 OF 1 |