www.dzyjzj.com Tel:0755-27575531 Fax:0755-27576267

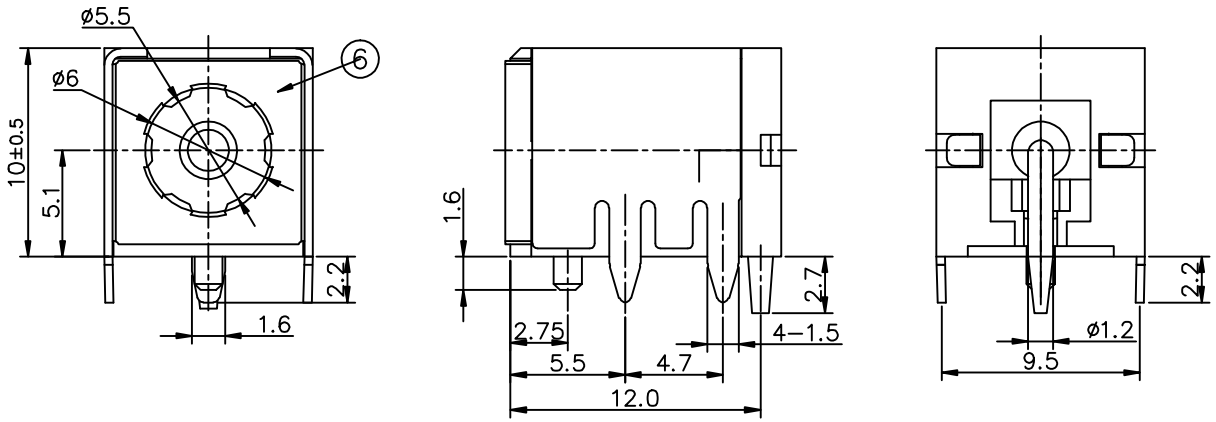


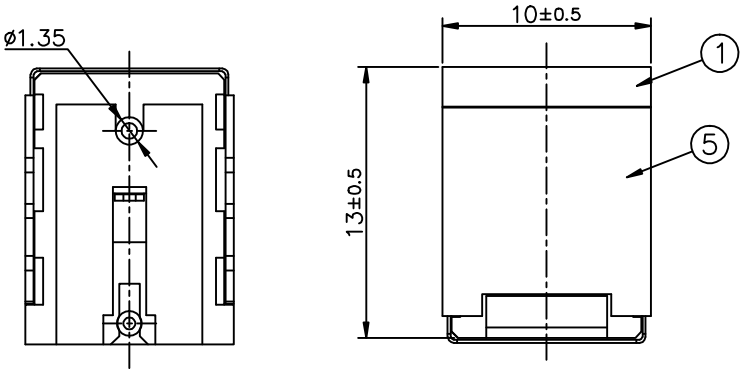


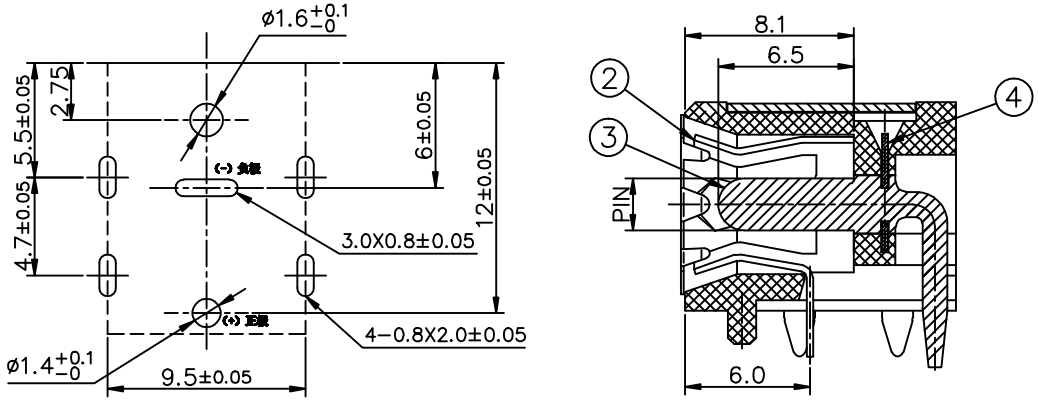


PCB MOUNTING HOLES
BOTTOM VIEW
(TOLERANCE: ±0.05)

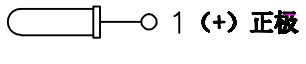


SCHEMATIC

| PIN | ø1.65 | ø2.00 | ø2.50 |
|---|---|---|---|

ELECTRICAL
VOLTAGE RATING:20V DC (R.M.S)
CURRENT RATING:10A
CONTACT RESISTANCE:30mΩ MAX.
INSULATION RESISTANCE:100 MΩ MIN.
DIELECTRIC WITHSTAND VOLTAGE:500V AC (R.A.M)
TEMPERATRUE RANGE:−25°C TO +85°C
MATERIALS & PLATING: SEE THE TABLE BELOW.

| LTR | PART NAME | QTY | MATERIAL(THICK,COLOR) | REMARK |
|---|---|---|---|---|
| 6 | GROUND | 1 | SUS 301 0.15t | |
| 5 | SHEEL | 1 | SPCC 0.4t | Ni−PLATING |
| 4 | TERMINAL | 1 | SUS 301 0.3t | |
| 3 | PIN | 1 | BRASS | Au−PLATING |
| 2 | SPRING | 1 | COPPER ALLOY 0.3t | CuSn−PLATING |
| 1 | HOUSING | 1 | PA9T UL 94V−0 | BLACK |

深圳市华宇创精密电子有限公司

| | | | |
|---|---|---|---|
| TOLERANCE: X.X ±0.30, X.XX ±0.25, X.XXX ±0.15, X.° ±2°, X.X° ±0.5° | DRAWED BY: 陈一鸣 | DATE: 2014-02-23 | PART NAME: DC-007B |
| UNIT: mm [inch] | CHECKED BY: 马跃 | DATE: 2014-02-23 | PART NO.: HYCW02-DC007B-XXXB |
| SCALE:1:1 SIZE: A4 | APPROVED BY: 邱敏 | DATE: 2014-02-23 | MOLD NO.: / |
| | | | DRAW NO.: HYC-2610161559 |
| | | | SHEET NO.: 1 OF 1 |