产 品 规 格 书
Product Specification

CUSTOMER	客户:	
CUSTOMER PN	客户 PN:	
HANG CRYSTAL P/N	杭晶物料编码:	**HCTB1-400.000-CRBEL**
MODEL	产品型号:	**Ceramic Resonator 9.0x8.0x3.5**
NOMINAL FREQUENCY	频率:	**400kHz**
ISSUE DATE	日期:	**2017 / 10 / 15**

CUSTOMER'S APPROVAL

客户确认

(PLEASE RETURN A COPY WITH APPOVAL)
（请将确认的复印件返回我司）

APPROVED	QA
MB.	James J

SUZHOU HANGJING ELEC&TECH CO.,LTD
苏州杭晶电子科技有限公司
No. 207, Blk. B, Chenlei Science & Technology Park, No. 1, First Qunxing Road, Suzhou Industrial Park, Jiangsu, China
TEL 86 (0)512 65916689
FAX 86 (0)512 65918005

Revision	Description / ECN	Prepared	Approved	Date
1	Initial release	MB	James Jiang	2017-10-15
2	Not issued			
3	Not issued			

1. NOMINAL AND MAXIMUM RATINGS, OPERATING AND STORAGE CONDITIONS

	PARAMETER	MIN	TYP	MAX	Unit	Conditions / Remarks
1	Nominal frequency		**400.000**		kHz	
2	Withstanding Voltage			50	V	DC，1min
3	Insulation Resistance			100	MΩ	10V，1min
4	Rating Voltage UR（V）max			50	V	DC
				15	V	p-p
5	Operating temperature range	–25	+25	+85	°C	
6	Storage Temperature Range	–40		+85	°C	

2. ELECTRICAL PARAMETER LIMITS

	PARAMETER	MIN	MAX	Unit	Remarks
1	Frequency Accuracy	–2.0	+2.0	kHz	
2	Temperature Coefficient of Oscillation Frequency	–0.3	+0.3	%	
3	Oscillation Frequency Aging Rate (10years)	–0.3	+0.3	%	
4	Resonant Impedance		20	Ω	

3. MEASUREMENTS

Measurement Conditions:

Parts shall be measured under a condition (Temp.:20℃±15℃, Humidity:65%±20% R.H.)

unless the standard condition(Temp.:25 ℃±3 ℃,Humidity： 65%±5% R.H.) is regulated to measure.

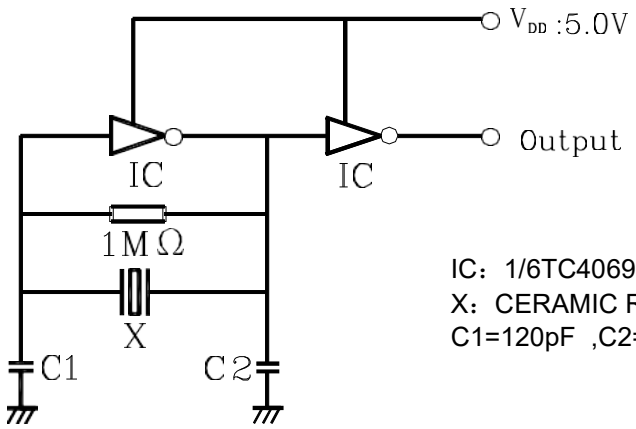

IC：1/6TC4069UBP×2
X：CERAMIC RESONATOR
C1=120pF ,C2=470 pF

4. OUTLINE DRAWING(mm)

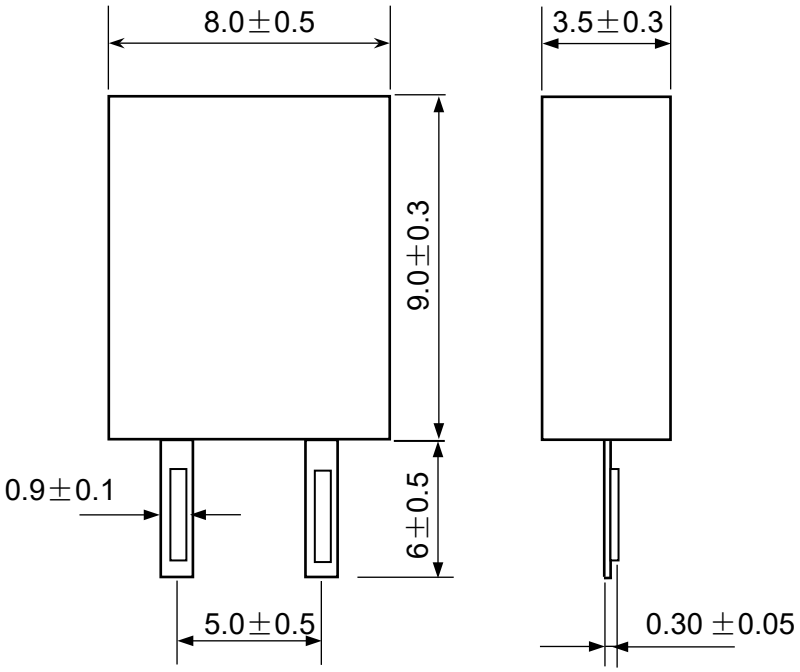

5. RELIABILITY TEST INFORMATION

No.	Item	Condition of Test	Performance Requirement
5.1	Humidity	Subject the resonator at 40±2℃ and 90%-95% R.H. for 96h, resonators shall be measured after being placed in natural conditions for 1h.	It shall fulfill Table 1.
5.2	High Temperature Exposure	Subject the resonator to 85 ± 2 ℃ for 96h, resonator shall be measured after being placed in natural conditions for 1h.	It shall fulfill Table 1.
5.3	Low Temperature Exposure	Subject the resonator to -40 ± 2 ℃ for 96h, resonator shall be measured after being placed in natural conditions for 1h.	It shall fulfill Table 1.
5.4	Temperature Cycling	After temperature cycling of blow table was performed 5 times, Filter shall be measured after being placed in natural conditions for 1h.	It shall fulfill Table 1.
		Temperature: –25±3℃ — Time: 30±3 min Temperature: 85±3℃ — Time: 30±3 min	
5.5	Vibration	Subject the resonator to vibration for 2h. Each in x y and z axis with the amplitude of 1.5mm, The frequency shall be varied uniformly between the limits of 10Hz-55Hz-10Hz and then resonator shall be measured.	It shall fulfill Table 1.

No.	Item	Condition of Test	Performance Requirement
5.6	Mechanical Shock	Resonator shall be measured after 3 times random dropping from the height of 70cm on concrete floor.	No visible damage and it shall fulfill Table 1.
5.7	Resistance to Soldering Heat	Lead terminals are immersed up to 2 mm from filter's body in soldering bath of 260℃±5℃ for 10s ± 1s and then resonator shall be measured after being placed in natural conditions for 1h.	It shall fulfill Table 1.
5.8	Solderability	Lead terminals are immersed up to 2mm from filter's body in soldering bath of 250℃±5℃ for 3s±0.5s.	More than 95% of the terminal surface of the filter shall be covered with fresh solder.

Table 1

Item	Specification after test
Oscillation Frequency Change Δf/f (%) max	±0.3
The limits in the above table are referenced to the initial measurements.	

6. CAUTION OF USE

6.1 Do not clean or wash the component for it is not hermetically sealed.

6.2 Don't be close to fire

6.3 Don't apply excess mechanical stress to the component.

6.4 Don't bend terminals of the component

6.5 This specification mentions the quality of the component as a single unit. Please insure the component is thoroughly evaluated in your application circuit.

6.6 Do not pass through the re-flow. Handwork jointing or wave crest jointing is allowed.